ZIMMER RESIDENCE

4661 FOREST AVE SE, MERCER ISLAND, WA 98040

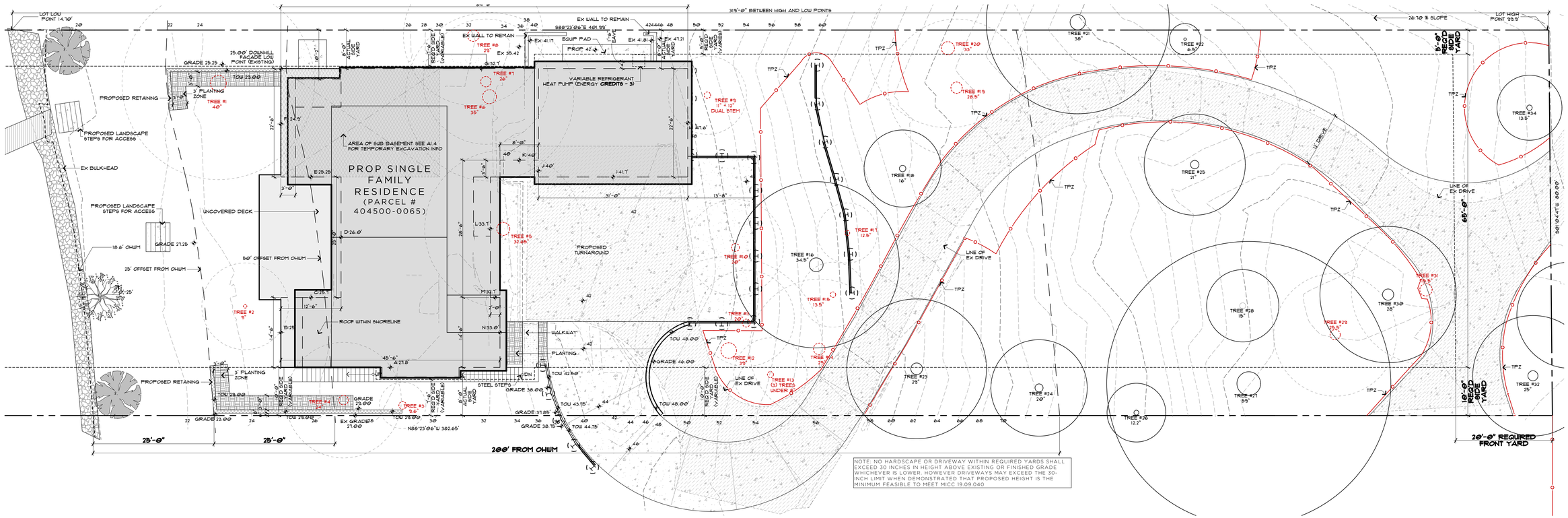

NOTE: NO HARDSCAPE OR DRIVEWAY WITHIN REQUIRED YARDS SHALL EXCEED 30 INCHES IN HEIGHT ABOVE EXISTING OR FINISHED GRADE WHICHEVER IS LOWER. HOWEVER DRIVEWAYS MAY EXCEED THE 30-INCH LIMIT WHEN DEMONSTRATED THAT PROPOSED HEIGHT IS THE MINIMUM FEASIBLE TO MEET MICC 19.09.040

SITE PLAN

SCALE: 1" = 10'

ABBREVIATIONS:

ABV	ABOVE
AFF	ABOVE FINISHED FLOOR
BLW	BELOW
BOT	BOTTOM
BOW	BOTTOM OF WALL
CAB	CABINET
CL	CENTERLINE
CONC	CONCRETE
CONT	CONTINUOUS
CP	CENTERPOINT
DET	DETAIL
DIA	DIAMETER
DIM	DIMENSION
DR	DOOR
DS	DOWNSPOUT
D/W	DISHWASHER
EA	EACH
EX	EXISTING
EXT	EXTERIOR
FOC	FACE OF CONCRETE
FOW	FACE OF WALL
FN GRDE	FINISHED GRADE
FNDN	FOUNDATION
FLR	FLOOR
FP	FIREPLACE
GA	GAUGE
GWB	GYPSUM WALL BOARD
HB	HOSE BIBB
HGT	HEIGHT
INFO	INFORMATION
INSUL	INSULATION
INT	INTERIOR
LV	LOW VOLTAGE
MTL	METAL
MFR	MANUFACTURER
N/A	NOT APPLICABLE
NIC	NOT IN CONTRACT
NFC	NOT FOR CONSTRUCTION
OC	ON CENTER
PL	PROPERTY LINE
RAD	RADIUS
RE:	REFER TO
SIM	SIMILAR
TBD	TO BE DETERMINED
TG	TEMPERED GLASS
T&G	TONGUE & GROOVE
TOW	TOP OF WALL
TYP	TYPICAL
UNO	UNLESS NOTED OTHERWISE
VIF	VERIFY IN FIELD
WD	WOOD
WDW	WINDOW

PLAN LEGEND:

- EXISTING WALL TO REMAIN
- NEW FULL-HEIGHT WALL
- NEW FULL-HEIGHT CONCRETE WALL
- PARTIAL-HEIGHT WALL
- PROPERTY LINE
- BUILDING / STRUCTURE ABOVE
- BUILDING / STRUCTURE BELOW
- CENTERLINE
- AREA OF DRAWING REVISION
- ELEVATION MARKER
- SECTION MARKER

DUTY OF COOPERATION:

RELEASE + ACCEPTANCE OF THESE DOCUMENTS INDICATES COOPERATION AMONG THE OWNER, THE CONTRACTOR, + RIPPLE DESIGN STUDIO. ANY ERRORS, OMISSIONS, OR DISCREPANCIES DISCOVERED BY THE USE OF THESE DOCUMENTS SHALL BE REPORTED IMMEDIATELY TO RIPPLE DESIGN STUDIO. FAILURE TO DO SO SHALL RELIEVE RIPPLE DESIGN STUDIO FROM ANY RESPONSIBILITY OF THE CONSEQUENCES.

ANY DEVIATIONS FROM THESE DOCUMENTS WITHOUT THE CONSENT OF RIPPLE DESIGN STUDIO ARE UNAUTHORIZED. FAILURE TO OBSERVE THESE PROCEDURES SHALL RELIEVE RIPPLE DESIGN STUDIO OF RESPONSIBILITY FOR ALL CONSEQUENCES ARISING OUT OF SUCH ACTIONS.

GENERAL NOTES:

1. DO NOT SCALE DRAWINGS.
2. THIS PROJECT SHALL COMPLY WITH ALL GOVERNING REGULATIONS, ORDINANCES, BUILDING CODES, OR COVENANTS OF THE AREA IN WHICH IT IS BUILT.
3. APPROVAL BY AN INSPECTOR DOES NOT CONSTITUTE AUTHORITY TO DEVIATE FROM THE DRAWINGS OR SPECIFICATIONS.
4. THE CONTRACTOR SHALL SCHEDULE WALK-THROUGHS AT EACH OF BELOW NOTED INTERVALS:
   A. PRIOR TO THE COMMENCEMENT OF CONSTRUCTION.
   B. PRIOR TO THE COMMENCEMENT OF ALL MECHANICAL + ELECTRICAL WORK.
5. PROVIDE ALL NECESSARY BARRICADES, WARNING SIGNS, + DEVICES TO PROTECT PUBLIC + CONSTRUCTION PERSONNEL DURING CONSTRUCTION.
6. MAINTAIN ALL REQUIRED ACCESS + EGRESS DURING CONSTRUCTION.

FLOOR AREAS:

LOT AREA:	31,383 FT²
MAXIMUM ALLOWABLE GFA (R-15):	12,000 FT²
SUB-BASEMENT GROSS GFA:	[743] FT²
SUB-BASEMENT 'NON-EXCLUDED' GFA: (SEE BELOW)	242.22 FT²
BASEMENT GROSS GFA:	[2,400] FT²
BASEMENT 'NON-EXCLUDED' GFA: (SEE BELOW)	2,177.76 FT²
MAIN FLOOR CEILING UNDER 12' GFA:	1,729 FT²
MAIN FLOOR 12'-16' CEILING HEIGHT GFA (366 FT² @150%):	549 FT²
MAIN FLOOR 16'+ CEILING HEIGHT GFA (186 FT² @200%):	372 FT²
GARAGE GFA:	698 FT²
TOTAL GROSS FLOOR AREA:	(18.3%) 5,767.98 FT²

BASEMENT FLOOR EXCLUSION CALCS:

SUB BASEMENT

WALL SEGMENT	LENGTH	GRADE HEIGHT	WALL HEIGHT	COVERAGE %	RESULT
K	33'-0"	5'-4 1/2"	7'-0"	76.7%	25'-1"
L	22'-6"	3'-4 1/8"	7'-0"	47.7%	10'-9 1/2"
M	3'-8"	3'-5 5/8"	7'-0"	49.5%	2'-6 3/4"
N	5'-10"	0'	7'-0"	0%	0
O	23'-6"	5'-10 1/2"	7'-0"	83.9%	13'-10 3/8"
P	22'-6"	7'-0"	7'-0"	100%	22'-6"
TOTALS	111'-0"				74'-9 5/8"

74'-9 5/8" / 111'-0" = 67.4%
743 FT² X 67.4% = 500.78 FT² EXCLUDED
743 FT² - 500.78 FT² = **242.22 FT²**

BASEMENT

WALL SEGMENT	LENGTH	GRADE HEIGHT	WALL HEIGHT	COVERAGE %	RESULT
A	9'-0"	1'-9 3/8"	10'-9 1/8"	16.5%	1'-5 3/4"
B	32'-8"	0'	10'-9 1/8"	0%	0
C	14'-6"	0'	10'-9 1/8"	0%	0
D	12'-6"	0'	10'-9 1/8"	0%	0
E	25'-0"	0'	10'-9 1/8"	0%	0
F	17'-6"	0'	10'-9 1/8"	0%	0
G	22'-6"	0'	10'-9 1/8"	0%	0
H	42'-9"	0'	10'-9 1/8"	0%	0
I	2'-9"	3'-4 5/8"	10'-9 1/8"	31.4%	0'-10 3/8"
J	62'-0"	3'-4 3/4"	10'-9 1/8"	31.5%	19'-6 3/8"
TOTALS	236'-2"				21'-10 1/2"

21'-10 1/2" / 236'-2" = 9.26%
2,400 FT² X 9.26% = 222.24 FT² EXCLUDED
2,400 FT² - 222.24 FT² = **2,177.76 FT²**

AVERAGE BUILDING ELEVATION CALCS:

ELEVATION POINT "A"	27.80
SEGMENT LENGTH "A"	45.50
ELEV "A" x SEGMENT "A"	**1,264.90**
ELEVATION POINT "B"	25.00
SEGMENT LENGTH "B"	14.50
ELEV "B" x SEGMENT "B"	**362.50**
ELEVATION POINT "C"	25.70
SEGMENT LENGTH "C"	12.50
ELEV "C" x SEGMENT "C"	**321.25**
ELEVATION POINT "D"	26.00
SEGMENT LENGTH "D"	25.00
ELEV "D" x SEGMENT "D"	**650.00**
ELEVATION POINT "E"	25.25
SEGMENT LENGTH "E"	12.50
ELEV "E" x SEGMENT "E"	**315.63**
ELEVATION POINT "F"	24.90
SEGMENT LENGTH "F"	23.00
ELEV "F" x SEGMENT "F"	**572.70**
ELEVATION POINT "G"	32.70
SEGMENT LENGTH "G"	82.50
ELEV "G" x SEGMENT "G"	**2,697.75**
ELEVATION POINT "H"	47.60
SEGMENT LENGTH "H"	23.00
ELEV "H" x SEGMENT "H"	**1,094.80**
ELEVATION POINT "I"	41.70
SEGMENT LENGTH "I"	31.00
ELEV "I" x SEGMENT "I"	**1,292.70**
ELEVATION POINT "J"	40.00
SEGMENT LENGTH "J"	3.50
ELEV "J" x SEGMENT "J"	**140.00**
ELEVATION POINT "K"	40.00
SEGMENT LENGTH "K"	8.00
ELEV "K" x SEGMENT "K"	**320.00**
ELEVATION POINT "L"	33.70
SEGMENT LENGTH "L"	28.50
ELEV "L" x SEGMENT "L"	**960.45**
ELEVATION POINT "M"	32.70
SEGMENT LENGTH "M"	2.00
ELEV "M" x SEGMENT "M"	**65.40**
ELEVATION POINT "N"	33.00
SEGMENT LENGTH "N"	14.50
ELEV "N" x SEGMENT "N"	**478.50**
TOTAL OF ELEVATION POINTS x SEGMENT LENGHTS	**10,536.5E**
TOTAL SEGMENT LENGTHS	**326.00**
AVERAGE GRADE	**32.32**

"FIRE CODE ALT ON FILE"- CONDITIONS SHALL APPLY:

1. PROVIDED TYPEDX GYPSOM THROUGHOUT THE RESIDENCE ON ALL SURFACES.

2. PROVIDE SOLID CORE DOORS

3. NFPA 72 MONITORED FIRE ALARM SYSTEM. "A NFPA 72- CHAPTER 29 MONITORED FIRE ALARM SYSTEM IN COMPLIANCE WITH NFPA 72 AND CoMI STANDARDS SHALL BE INSTALLED THROUGHOUT THE RESIDENCE. A SEPARATE FIRE PERMIT IS REQUIRED."

4. NFPA 13R FIRE SPRINKLER SYSTEM "A NFPA 13R FIRE SPRINKLER SYSTEM IN COMPLIANCE WITH NFPA 13R AND CoMI STANDARDS SHALL BE INSTALLED THROUGHOUT THE RESIDENCE. A SEPARATE FIRE PERMIT IS REQUIRED."

NOTE THAT THIS SPRINKLER SYSTEM REQUIRES A MINIMUM OF 1.5" WATER METER AND 2" WATER SUPPLY LINE.

LOT COVERAGE CALCS:

LOT AREA	31,383 FT²
MAXIMUM ALLOWABLE BUILDING COVERAGE:	(35%) 10,984 FT²
EXISTING RESIDENCE TO REMAIN:	0 FT²
PROPOSED RESIDENCE + COVERED PORCH:	4,006 FT²
PROPOSED VEHICULAR USE:	5,012 FT²
TOTAL BUILDING COVERAGE UPON COMPLETION:	(28.7%) 9,018 FT²

HARDSCAPE CALCS:

LOT AREA	31,383 FT²
MAXIMUM ALLOWABLE HARDSCAPE COVERAGE:	(16.3%) 5,118 FT²
(9% OF LOT 2,824 + BORROWED AREA 2,294)	
ALL EXISTING HARDSCAPE TO BE REMOVED	
PROPOSED PAVED AREA (MECH, MID LEVEL NORTH, SUB):	132 FT²
PROPOSED WALKWAYS (SW AUTOCOURT, LOWER SOUTH):	49 FT²
PROPOSED STAIRS (2 SETS):	159 FT²
PROPOSED RETAINING WALLS:	71 FT²
TOTAL PROPOSED HARDSCAPE:	(1.3%) 411 FT²
SHORELINE CALCULATIONS (INCLUDED ABOVE):	3,678 FT²
0'-25' OF OHWM:	2,031 FT²
EXISTING BULKHEAD HARDSCAPE:	74 FT²
PROPOSED LANDSCAPE ACCESS STEPS (2 SETS):	(30+30) 60 FT²
TOTAL HARDSACPE 0'-25':	(6.6%) 134 FT²
25'-50' OF OHWM:	2,021 FT²
PROPOSED RETAINING WALLS:	44 FT²
PROPOSED ROOF AREA:	521 FT²
PROPOSED STAIRS:	30 FT²
TOTAL HARDSCAPE 25'-50':	(29.4%) 595 FT²

PROJECT TEAM:

CLIENT / OWNER:
ZIMMER RESIDENCE
4661 FOREST AVE SE
MERCER ISLAND, WA 98040
360.731.0176

ARCHITECT / APPLICANT:
RIPPLE DESIGN STUDIO - JIM DEARTH
4303 STONE WAY N
SEATTLE, WA 98103
206.913.2333

SURVEYOR:
BRH
2009 MINOR AVE EAST
SEATTLE, WA 98102
206.323.4144

GEOTECHNICAL ENGINEER:
PANGEO - MICHAEL XUE
3213 EASTLAKE AVE E SUITE B
SEATTLE, WA 98102
206.262.0370

CIVIL ENGINEER:
CIVIL ENGINEERING SOLUTIONS - DUFFY ELLIS
2244 NW MARKET ST SUITE B
SEATTLE, WA 98107
206.930.0342

STRUCTURAL ENGINEER:
BUKER ENGINEERING - DANIEL BUKER
4303 STONE WAY N
SEATTLE, WA 98103
206.258.6333

CONTRACTOR:
TBD

DEVELOPMENT PROPOSALS FOR A NEW SINGLE-FAMILY HOME SHALL REMOVE JAPANESE KNOTWEED (POLYGONUM CUSPIDATUM) AND REGULATED CLASS A, REGULATED CLASS B, AND REGULATED CLASS C WEEDS IDENTIFIED ON THE KING COUNTY NOXIOUS WEED LIST, AS AMENDED, FROM REQUIRED LANDSCAPING AREAS ESTABLISHED PURSUANT TO SUBSECTION (H)(3)(A) OF THIS SECTION. NEW LANDSCAPING ASSOCIATED WITH NEW SINGLE-FAMILY HOME SHALL NOT INCORPORATE ANY WEEDS IDENTIFIED ON THE KING COUNTY NOXIOUS WEED LIST, AS AMENDED. PROVIDED, THAT REMOVAL SHALL NOT BE REQUIRED IF THE REMOVAL WILL RESULT IN INCREASED SLOPE INSTABILITY OR RISK OF LANDSLIDE OR EROSION.

PROJECT INFO:

PROJECT ADDRESS:
4661 FOREST AVE SE
MERCER ISLAND, WA 98040

SCOPE OF WORK:
DEMOLITION AND RE-BUILD NEW SINGLE FAMILY RESIDENCE

ZONE:
R-15

LEGAL DESCRIPTION:
LOT 14 AND THE NORTH 30 FEET OF LOT 13, LAKE ISLE, ACCORDING TO THE PLAT THEREOF, RECORDED IN VOLUME 19 OF PLATS , PAGE 35, RECORDS OF KING COUNTY, WASHINGTON; TOGETHER WITH SECOND CLASS SHORELANDS ADJOINING. SITUATE IN THE COUNTY OF KING, STATE WASHINGTON

ACCESSOR'S PARCEL NUMBER:
404500-0065

BUILDING CODE + OCCUPANCY:
2021 IRC (ARCHITECTURAL) + IBC (STRUCTURAL)
R-3 SINGLE FAMILY RESIDENTIAL (RESIDENCE)
U STORAGE (GARAGE, STORAGE)

TYPE OF CONSTRUCTION:
TYPE-VB; NFPA13R SPRINKLER SYSTEM + NFPA73 MONITORED ALARM SYSTEM

VICINITY MAP:

RIPPLE
DESIGN STUDIO
206.913.2333
4303 STONE WAY N
SEATTLE, WA 98103

9790 REGISTERED ARCHITECT
JAMES M DEARTH
STATE OF WASHINGTON

ZIMMER RESIDENCE
4661 FOREST AVE SE
MERCER ISLAND, WA
98040

PROJECT INFORMATION

THIS DRAWING, AS AN INSTRUMENT OF SERVICE, IS + SHALL REMAIN THE SOLE PROPERTY OF RIPPLE DESIGN STUDIO + SHALL NOT BE REPRODUCED, PUBLISHED, OR USED IN ANY MANNER WITHOUT PROPER AUTHORIZATION.
COPYRIGHT © 2017 BY RIPPLE DESIGN STUDIO

RELEASE

7 APRIL 2025

PERMIT CORRECTIONS
9 MAY 2025

PERMIT CORRECTIONS
10 JUNE 2025

PERMIT CORRECTIONS
17 JULY 2025

A1.0

ZIMMER
AUTHORED: 7/17/25

LEGEND

	AREA DRAIN
ABAN/RET	ABANDONED/RETIRED
	ASPHALT (ASPH)
BLRD	BOLLARD
	BRICK SURFACE
	BUILDING LINE
BC	BUILDING CORNER
	CANOPY
	CATCH BASIN (CB)
	CONCRETE SURFACE
CW/BW	CONCRETE/BRICK WALK
CRW/WRW/BRW	CONCRETE/WOOD/BRICK RETAINING WALL
CC/XC	CONCRETE/EXTRUDED CURB
CP/IP	CONCRETE/IRON PIPE
	CHAIN LINK FENCE (CLF)
COL	COLUMN
℄/M	CENTERLINE/MONUMENT LINE
CS/WS	CONCRETE/WOOD STAIRS
CON	CONIFEROUS TREE
DEC	DECIDUOUS TREE
CMP	CORRUGATED METAL PIPE
C.O.C.	CENTER OF CHANNEL
DWY	DRIVEWAY
EM	ELECTRICAL METER
	FOUND SURVEY MONUMENT (AS NOTED)
	GUY ANCHOR
	IRON FENCE (WIF)
IE	INVERT ELEVATION
LSCAPE/PA	LANDSCAPE/PLANTER
	MANHOLE
US	MAILBOX (FEDERAL/PRIVATE)(MB)
OHP/OHT	OVERHEAD POWER/TELEPHONE
℄	PROPERTY LINE (PL)
(P)	PAINTED UTILITY LOCATION
⟹	PIPE FLOW DIRECTION
PS/PSS	COMBINED/SANITARY SEWER
PSD	STORM DRAIN
(R)	RECORD DATA
	ROCKERY
RE	ROOF ELEVATION
SD	SERVICE DRAIN (STORM)
CO	CLEANOUT
SSS	SANITARY SIDE SEWER (RECORD)
	SIGN/STREET NAME SIGN
	TEMPORARY BENCHMARK (TBM)
U/PP	UTILITY POLE (WOOD)
WV	WATER VAULT
W	WATER MAIN
WM	WATER METER
	WATER VALVE
VO/CO	VACATION/CONDEMNATION ORDINANCE
	WOOD FENCE (WF)
	REBAR AND CAP

STATEMENT OF TOPOGRAPHIC MAP ELEMENTS (WAC 332-130-145)

2(B) PURPOSE: CIVIL ENGINEERING DESIGN.

2(C) CONTOUR SOURCE: CONTOURS DERIVED FROM DIRECT FIELD OBSERVATIONS

2(F) CONTOUR ACCURACY: COMPLIES WITH UNITED STATES NATIONAL MAP ACCURACY STANDARDS (90% OR GREATER OF ALL SURVEY POINTS CHECKED ARE CORRECT WITHIN HALF OF ONE CONTOUR INTERVAL).

2(G) LIMITATIONS: THIS TOPOGRAPHIC SURVEY IS TO SUPPORT SPECIFIC EFFORTS WITHIN THE AREA OF MAPPING SHOWN.

2(H) BOUNDARY SOURCE: FIELD SURVEY OF CONTROLLING MONUMENTS, AND CONSIDERATION OF EXISTING RECORDS OF SURVEYS FOR DETERMINING ON THE GROUND POSITIONS OF DEEDED PROPERTY AND EASEMENT LINES.

3(A) & 3(B) UTILITIES: UNDERGROUND UTILITIES ARE SHOWN BY ONE OR MORE OF THE FOLLOWING METHODS:

1. SURVEY FIELD OBSERVATION OF MARKINGS PRODUCED BY DIRECT UTILITY DETECTION WORK.
2. DIRECT OBSERVATIONS OF UNDERGROUND, GRAVITY FLOW PIPES PERFORMED AT VISIBLE CONTROLLING STRUCTURES.
3. SCALING OF AS-BUILTS, DESIGN DRAWINGS OR OTHER RECORDS.

3(C) SCOPE STATEMENT: AGREED UPON SCOPE BETWEEN PROJECT OWNER/AGENT AND SURVEYOR IS TO PROVIDE A COMPLIANT TOPOGRAPHIC SURVEY.

SPOT ELEVATION AND CONTOUR INTERVAL ATTESTATION:

THE AVERAGE CONTOUR ELEVATION AND SPOT ELEVATIONS WITHIN THE VICINITY OF THE BUILDING FOOTPRINT TO BE ACCURATE WITHIN 6 INCHES VERTICALLY AND HORIZONTALLY FROM ACTUAL ELEVATIONS

N

20 0 10 20

(IN FEET)
1 inch = 20 ft.

UTILITY PROVIDERS:

UTILITY PROVIDERS:
SANITARY SEWERS, WATER, STORM DRAINAGE
CITY OF MERCER ISLAND
DEVELOPMENT SERVICES
9611 SE 36TH STREET
MERCER ISLAND, WA 98040
(206) 236-5300

POWER AND NATURAL GAS
PUGET SOUND ENERGY
355 110TH AVENUE NE
BELLEVUE, WA 98004
(206) 225-5773

TELEPHONE
LUMEN TECHNOLOGIES
1600 7TH AVENUE
SEATTLE, WA 98191
(800) 244-1111

HORIZONTAL DATUM:

NAD 83/2011 (EPOCH 2010.00)

HORIZONTAL BENCHMARKS:

OWNER:	CITY OF MERCER ISLAND
ID#	
DESCRIPTION:	FOUND 2"DISC W/ PUNCH IN CONC, MONUMENT IN CASE, DOWN 0.4'
LOCATION:	FOREST AVE SE & SE 46TH BLOCK
NORTHING:	208378.12
EASTING:	1295666.57
OWNER:	CITY OF MERCER ISLAND
ID#	
DESCRIPTION:	FOUND 1"IP W/ TACK, MONUMENT IN CASE, DOWN 1.15'
LOCATION:	FOREST AVE SE & SE 48TH BLOCK
NORTHING:	207778.18
EASTING:	1295655.26

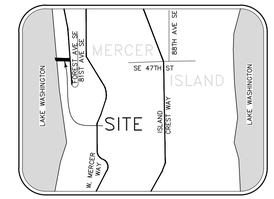

VICINITY MAP
NO SCALE

VERTICAL DATUM:

NAVD 88

SOURCE:	BRH
ID#	TBM 'A'
DESCRIPTION:	RAILROAD SPIKE IN UTILITY POLE AT WEST FACE
LOCATION:	EAST SIDE OF FOREST AVE SE HOUSE #4702
ELEVATION:	108.64

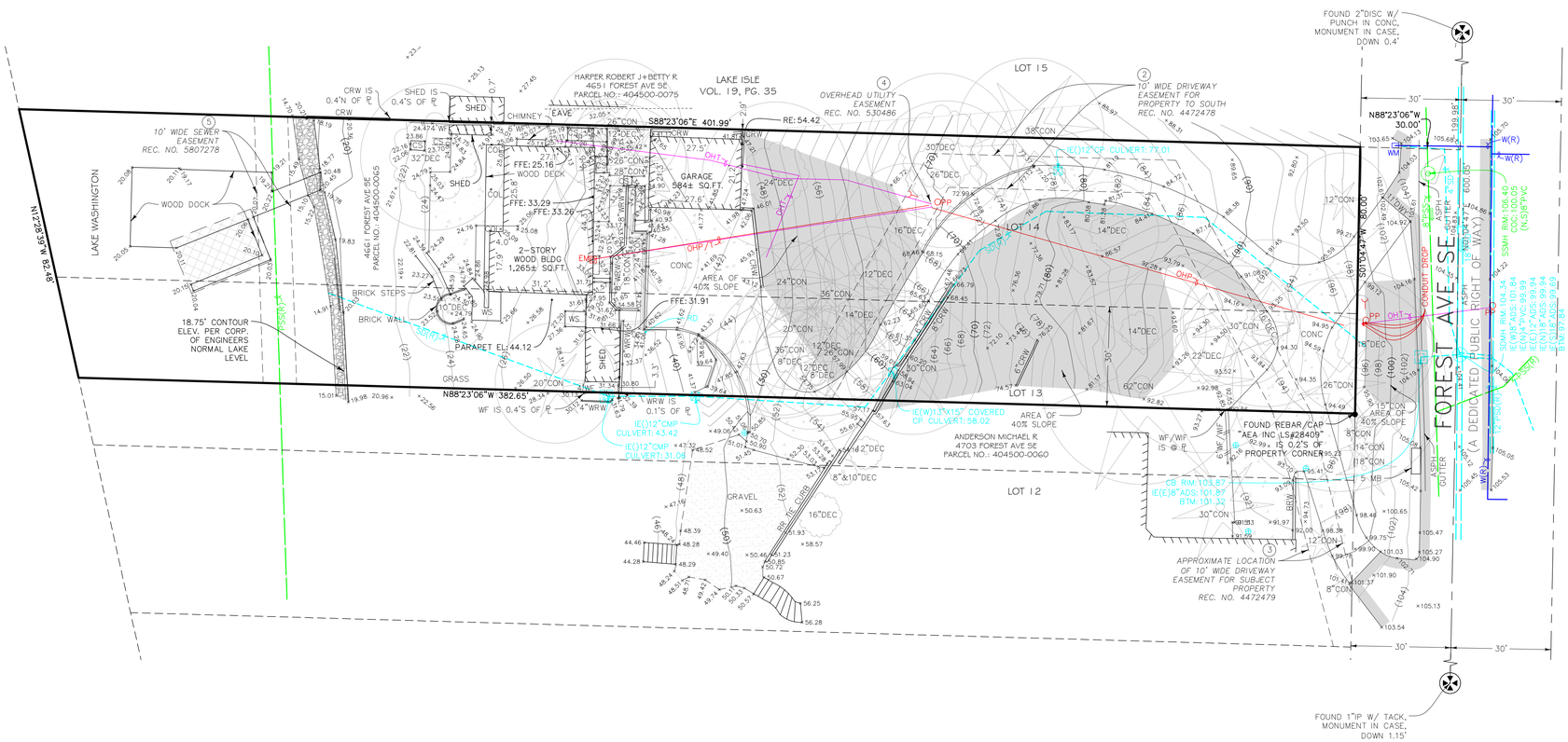

SITE NOTES

SITE ADDRESS:

4661 FOREST AVENUE SE
MERCER ISLAND, WA 98040

TAX ACCOUNT NO.:

404500-0065-01

ZONING:

R-15

ZONING AGENCY:

CITY OF MERCER ISLAND
DEVELOPMENT SERVICES
9611 SE 36TH STREET
MERCER ISLAND, WA 98040
(206) 236-3600

SETBACKS:

CURRENT SETBACK REQUIREMENTS SUBJECT TO SITE PLAN REVIEW. CURRENT SETBACKS MAY DIFFER FROM THOSE IN EFFECT DURING DESIGN/CONSTRUCTION OF EXISTING IMPROVEMENTS.

THE ISSUANCE OF A CERTIFICATE OF OCCUPANCY BY THE GOVERNING JURISDICTION INDICATES THAT STRUCTURES ON THIS PROPERTY COMPLIED WITH MINIMUM SETBACK AND HEIGHT REQUIREMENTS FOLLOWING CONSTRUCTION.

FLOOD ZONE:

THIS SITE APPEARS ON NATIONAL FLOOD INSURANCE RATE MAP, DATED AUGUST 19, 2020, COMMUNITY PANEL NO. 53033C0675G, AND IS SITUATED IN ZONE "X", AREAS DETERMINED TO BE OUTSIDE THE 0.2% ANNUAL CHANCE FLOODPLAIN.

AREA:

SITE AS SHOWN CONTAINS 31,383 SQUARE FEET OR 0.7205 ACRES, MORE OR LESS.

PARKING SPACE COUNT:

PARKING SPACES TOTAL 0 INCLUDING 0 DISABLED PARKING SPACES.

SUBSTRUCTURES:

BURIED UTILITIES ARE SHOWN AS INDICATED ON RECORDS MAPS FURNISHED BY OTHERS AND VERIFIED WHERE POSSIBLE BY FEATURES LOCATED IN THE FIELD. WE ASSUME NO LIABILITY FOR THE ACCURACY OF THOSE RECORDS. FOR THE FINAL LOCATION OF EXISTING UTILITIES IN AREAS CRITICAL TO DESIGN CONTACT THE UTILITY OWNER/AGENCY.

TELECOMMUNICATIONS/FIBER OPTIC DISCLAIMER:

RECORDS OF UNDERGROUND TELECOMMUNICATIONS AND/OR FIBER OPTIC LINES ARE NOT ALWAYS AVAILABLE TO THE PUBLIC. BRH HAS NOT CONTACTED EACH OF THE MANY COMPANIES, IN THE COURSE OF THIS SURVEY, WHICH COULD HAVE UNDERGROUND LINES WITHIN ADJACENT RIGHTS-OF-WAY. THEREFORE, BRH DOES NOT ACCEPT RESPONSIBILITY FOR THE EXISTENCE OF UNDERGROUND TELECOMMUNICATIONS/FIBER OPTIC LINES WHICH ARE NOT MADE PUBLIC RECORD WITH THE LOCAL JURISDICTION. AS ALWAYS, CALL 1-800-424-5555 BEFORE CONSTRUCTION.

DESCRIPTION:

LOT 14 AND THE NORTH 30 FEET OF LOT 13, LAKE ISLE, ACCORDING TO THE PLAT THEREOF, RECORDED IN VOLUME 19 OF PLATS, PAGE 35, RECORDS OF KING COUNTY, WASHINGTON;

TOGETHER WITH SECOND CLASS SHORELANDS ADJOINING.

SITUATE IN THE COUNTY OF KING, STATE OF WASHINGTON.

TITLE REPORT REFERENCE:

THIS SURVEY WAS CONDUCTED ACCORDING TO THE DESCRIPTION SHOWN, FURNISHED BY CHICAGO TITLE INSURANCE COMPANY, COMMITMENT NO. 0211320-ETU, DATED MAY 12, 2021. THE EASEMENTS SHOWN OR NOTED HEREON RELATE TO THIS COMMITMENT.

NOTE: EASEMENTS CREATED OR RESCINDED AFTER THIS DATE ARE NOT SHOWN OR NOTED HEREON.

TITLE REPORT SCHEDULE B EXCEPTIONS
ITEMS CIRCLED ARE SHOWN ON MAP.

1. COVENANTS, CONDITIONS, RESTRICTIONS, RECITALS, RESERVATIONS, EASEMENTS, EASEMENT PROVISIONS, DEDICATIONS, BUILDING SETBACK LINES, NOTES, STATEMENTS, AND OTHER MATTERS, IF ANY, BUT OMITTING ANY COVENANTS OR RESTRICTIONS, IF ANY, INCLUDING BUT NOT LIMITED TO THOSE BASED UPON RACE, COLOR, RELIGION, SEX, SEXUAL ORIENTATION, FAMILIAL STATUS, MARITAL STATUS, DISABILITY, HANDICAP, NATIONAL ORIGIN, ANCESTRY, OR SOURCE OF INCOME, AS SET FORTH IN APPLICABLE STATE OR FEDERAL LAWS, EXCEPT TO THE EXTENT THAT SAID COVENANT OR RESTRICTION IS PERMITTED BY APPLICABLE LAW, AS SET FORTH ON THE PLAT OF LAKE ISLE:

   RECORDING NO: 703736

   SURVEYOR'S NOTE: AFFECTS SUBJECT PROPERTY, NO PLOTTABLE ITEMS.

2. EASEMENT(S) FOR THE PURPOSE(S) SHOWN BELOW AND RIGHTS INCIDENTAL THERETO, AS GRANTED IN A DOCUMENT:

   PURPOSE: PRIVATE ROAD
   RECORDING DATE: AUGUST 6, 1954
   RECORDING NO.: 4472478
   AFFECTS: EASTERLY PORTION OF SAID PREMISES

   SAID EASEMENT CONTAINS A PROVISION FOR BEARING A PROPORTIONATE OR EQUAL COST OF MAINTENANCE, REPAIR OR RECONSTRUCTION OF DRIVEWAY BY THE COMMON USERS.

3. COVENANT TO BEAR PART OR ALL OF THE COST OF CONSTRUCTION, REPAIR OR MAINTENANCE OF EASEMENT GRANTED OVER ADJACENT PROPERTY:

   PURPOSE OF EASEMENT: PRIVATE ROAD
   RECORDING NO.: 4478479

4. EASEMENT(S) FOR THE PURPOSE(S) SHOWN BELOW AND RIGHTS INCIDENTAL THERETO, AS GRANTED IN A DOCUMENT:

   GRANTED TO: PUGET SOUND POWER & LIGHT COMPANY, A WASHINGTON CORPORATION
   PURPOSE: ELECTRIC TRANSMISSION AND/OR DISTRIBUTION SYSTEM
   RECORDING DATE: FEBRUARY 21, 1962
   RECORDING NO.: 5390486
   AFFECTS: PORTION OF SAID PREMISE

   SURVEYOR'S NOTE: EASEMENT IS FOR ELECTRIC LINES AND POLES ON LOT 14. CANNOT BUILD WITHIN 10 FEET OF POLES OR LINES. LINES AND POLES CAN BE MOVED BY MUTUAL CONSENT.

5. EASEMENT(S) FOR THE PURPOSE(S) SHOWN BELOW AND RIGHTS INCIDENTAL THERETO, AS GRANTED IN A DOCUMENT:

   GRANTED TO: MERCER ISLAND SEWER DISTRICT
   PURPOSE: SEWER PIPE(S)
   RECORDING DATE: NOVEMBER 4, 1964
   RECORDING NO.: 5807278
   AFFECTS: SECOND CLASS SHORELANDS

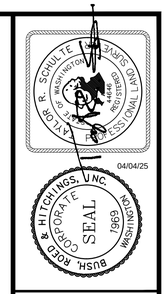

BUSH, ROED & HITCHINGS, INC.
LAND SURVEYORS & CIVIL ENGINEERS
2009 MINOR AVE. EAST
SEATTLE, Washington
98102-3513
(206) 323-4144
1-800-935-0508
WWW.BRHINC.COM

NO	REVISION	DATE
1	ADDED CONTOUR INTERVAL ATTESTATION	04/04/25

BOUNDARY AND TOPOGRAPHIC SURVEY
KAREN ZIMMER
4661 FOREST AVE SE
MERCER ISLAND KING COUNTY WASHINGTON

drawn by HAK/FWH	checked by TRS
scale 1" = 20'	date 3/7/21
job no. 2021093.01	
sheet 1 of 1	

22"x34" 4/4/2025 \\BRH09\CAD\C3D\2021\2021093\SURVEYING\DWG\XS-SUR-01.DWG

Project Information
ZIMMER RESIDENCE
4661 FOREST AVE SE
MERCER ISLAND, WA 98040

Contact Information
JIM DEARTH - RIPPLE DESIGN STUDIO
4303 STONE WAY N
SEATTLE, WA 98103
2069132333

Messages / Comments * RESULT= PASS

Note: Review required for custom entries: - Flat/Vaulted Ceilings
UA Reduction = 11.86, Proposed UA is better than baseline by 1.4%

Window area is 26% of floor area
-
Whole House Mechanical Ventilation Airflow Rate: 225 CFM with Run Time Percent of 50%, Unbalanced, Not Distributed
Maximum allowable total measured duct leakage: 358 CFM25

* Results assume your inputs are complete and correct. Results do not constitute an approval. Analysis should be reviewed by your AHJ.

ANALYSIS SET UP

What code compliance pathway are you using?	U-Factor Compliance Path
Project Building Type?	New Construction
Occupancy Type?	R3 Single family dwellings and townhouses
Code Version?	WSEC 2021
Classification:	Medium Dwelling Unit – 4471 sq. ft.
Baseline Description:	Code Baseline - Baseline and proposed window areas are equal.
About Your Selection:	Up to 15 sf exempt window and 24 sf exempt door allowable
	-

RESULTS - Comparison of Baseline and Proposed Design **

Component Performance, R occupancies	Baseline U *	Baseline Area	Baseline UA	Proposed U	Proposed Area	Proposed UA
Doors U =	0.300	518	155.3	0.300	518	155.3
Overhead Glazing U =	0.500	0	0.0		0	0.0
Vertical Glazing U =	0.300	1,142	342.5	0.300	1,142	342.5
Flat/Vaulted Ceilings U =	0.024	2,561	61.5	0.022	2,561	55.5
Wall (above grade) U =	0.056	3,130	175.3	0.054	3,130	169.0
Floors over Crawlspace U =	0.029	198	5.7	0.020	198	4.0
Slab on Grade F =	0.540	210	113.4	0.550	210	115.5
Below Grade Wall U =	N/A	0			0	0.0
Below Grade Slab F =	N/A	0			0	0.0

* Values from Table R402.1.2 (Oct 2023)

Baseline UA Total	853.7	Proposed UA Total	841.8
Required Credits	8.0	Proposed Credits	8.0 from Tables 406.2 and 406.3
		UA Percent Reduction	1%
		UA Reduction	11.9

If the Proposed UA ≤ the Target UA, and the Proposed Credits from Table 406 are ≥ those required in Section R406, then the home meets the WSEC.

** Results assume your inputs are complete and correct. Results do not constitute an approval. Analysis should be reviewed by your AHJ.

Table R406.2 Energy Equalization Credits

System No.	Full Description	Select System Type	Fuel Normalization Credits (406.2)	Energy Credits (406.3)	Total Credits (406.2 & 406.3)
4	For heating system using a heat pump that meets federal standards for the equipment listed in Table C403.3.2(2) or Table C403.3.2(9) OR Air to Water heat pump units that are configured to provide both heating and cooling and are rated in accordance with AHRI 550/590	Variable Refrigerant Heat Pump or Air-to-Water Heat Pump	3.0	5.0	8.0

Table R406.3 Energy Credits

Option No.	Category	Select Options	Energy Credits	Brief Description of Selected Options*
1	Efficient Building Envelope	Not Selected	0.0	-
2	Air Leakage Control and Efficient Ventilation	Not Selected	0.0	0.00
3.1 -3.10	High Efficiency HVAC		0.0	
3.11	High Efficiency HVAC: Smart Thermostat	Option 3.11	0.5	Connected Energy Star Certified smart thermostat.
4	High Efficiency HVAC Distribution System	Not Selected	0.0	-
5.1	Efficient Water Heating: Drain Heat Recovery	Not Selected	0.0	-
5.2	Efficient Water Heating: Compact Hot Water Distribution	Not Selected	0.0	-
5.3-5.8	Efficient Water Heating	Option 5.3	0.5	Energy Star gas or propane water heater with min UEF of 0.80
6	Renewable Electric Energy 5,000 kWh	Option 6.1	4.0	On-site wind or solar electric energy, 0.5 credit per 600 kWh of generation up to maximum of 4.5 credits
7	Appliance Package		0.0	
		Energy Credits	5.0	

*Refer to WSEC 2015 Table R406.2 for complete option descriptions and requirements

WSU Code Compliance Calculator, WSEC 2021

THERMAL ENVELOPE DETAILS - Proposed Design

Conditioned Floor Area, Proposed Design	4,471 sq. ft
Classification	Medium Dwelling Unit
Notes	

Exterior Doors

Plan ID	Component Description	Ref.	Door U	Qt.	Width Feet	Width Inch	Height Feet	Height Inch	Area	UA
Exempt	Code Baseline, U=0.30	-	0.30	1	3	0	7	0	21	6.3
001A	Code Baseline, U=0.30	-	0.30	1	18	0	10	1	182	54.5
101A	Code Baseline, U=0.30	-	0.30	1	5	0	8	0	40	12.0
103A	Code Baseline, U=0.30	-	0.30	1	18	0	8	0	144	43.2
105A	Code Baseline, U=0.30	-	0.30	1	5	6	8	0	44	13.2
105B	Code Baseline, U=0.30	-	0.30	1	5	6	8	0	44	13.2
110A	Code Baseline, U=0.30	-	0.30	1	2	8	8	0	21	6.4
110B	Code Baseline, U=0.30	-	0.30	1	2	8	8	0	21	6.4
110C	Code Baseline, U=0.30	-	0.30	1	2	8	8	0	21	6.4
									0	0.0
									0	0.0
	Sum of Area and UA (excluding exempt door)								518	155.3
	Exterior Doors Area Weighted U									0.300

Overhead Glazing

Plan ID	Component Description	Ref.	Glazing U	Qt.	Width Feet	Width Inch	Height Feet	Height Inch	Area	UA
									-	
									-	
									-	
									-	
									-	
	Sum of Area and UA								0.0	0
	Overhead Glazing Area Weighted U									

Vertical Glazing Schedule Rows to Show 25

#	Plan ID	Component Description	Ref.	Glazing U	Qt.	Width Feet	Width Inch	Height Feet	Height Inch	Area	UA
	Exempt	U=0.30 (Code Baseline)	Table 406.2	0.30	1	7	6	2	0	15.0	4.50
1		U=0.30 (Code Baseline)	Table 406.2	0.30	1	2	6	2	0	5.0	1.50
2		U=0.30 (Code Baseline)	Table 406.2	0.30	1	2	6	6	6	16.3	4.88
3		U=0.30 (Code Baseline)	Table 406.2	0.30	3	2	6	8	0	60.0	18.00
4		U=0.30 (Code Baseline)	Table 406.2	0.30	1	4	0	2	0	8.0	2.40
5		U=0.30 (Code Baseline)	Table 406.2	0.30	1	4	0	6	6	26.0	7.80
6		U=0.30 (Code Baseline)	Table 406.2	0.30	1	4	0	8	0	32.0	9.60
7		U=0.30 (Code Baseline)	Table 406.2	0.30	1	4	6	5	0	22.5	6.75
8		U=0.30 (Code Baseline)	Table 406.2	0.30	1	5	6	2	0	11.0	3.30
9		U=0.30 (Code Baseline)	Table 406.2	0.30	1	5	6	6	0	33.0	9.90
10		U=0.30 (Code Baseline)	Table 406.2	0.30	1	6	6	2	0	13.0	3.90
11		U=0.30 (Code Baseline)	Table 406.2	0.30	1	6	6	6	6	42.3	12.68
12										-	-
13		U=0.30 (Code Baseline)	Table 406.2	0.30	1	7	6	6	6	48.8	14.63
14										-	-
15		U=0.30 (Code Baseline)	Table 406.2	0.30	2	6	6	8	0	104.0	31.20
16		U=0.30 (Code Baseline)	Table 406.2	0.30	3	3	0	6	0	54.0	16.20
17		U=0.30 (Code Baseline)	Table 406.2	0.30	3	6	0	2	0	36.0	10.80
18		U=0.30 (Code Baseline)	Table 406.2	0.30	4	3	0	6	6	78.0	23.40
19		U=0.30 (Code Baseline)	Table 406.2	0.30	4	3	0	4	0	48.0	14.40
20		U=0.30 (Code Baseline)	Table 406.2	0.30	4	3	0	5	0	60.0	18.00
21		U=0.30 (Code Baseline)	Table 406.2	0.30	4	3	0	6	0	72.0	21.60
22		U=0.30 (Code Baseline)	Table 406.2	0.30	6	3	0	5	0	90.0	27.00
23		U=0.30 (Code Baseline)	Table 406.2	0.30	9	3	0	8	0	216.0	64.80
24		U=0.30 (Code Baseline)	Table 406.2	0.30	11	3	0	2	0	66.0	19.80
25										-	-
		Sum of Area and UA (excluding exempt window)								1,141.8	342.5
		Vertical Glazing Area Weighted U									0.300
		Vertical Glazing and Doors Area Weighted U									0.300

Flat/Vaulted Ceilings

Plan ID	Component Description	Ref.	Attic U	Area	UA
	R49 blown Attic STD baffled (2018 Code Baseline, 1.1-1.4)	10-7	0.027	500	13.5
	2x6 24"oc R23 cavity + 4" polyiso	Custom	0.020	2,061	42.0
	Sum of Area and UA			2,561	55.5

Refer to WSEC R402.1.5

Walls (Above Grade)

Plan ID	Component Description	Ref.	Wall U	Net Area	UA
	R21 cavity+R0 foam INT 2X6W Lap (Code Baseline)	10-5	0.054	3,130	169
	Sum of Area and UA			3,130	169

WSU Code Compliance Calculator, WSEC 2021

Floor (over crawl or exterior)

Plan ID	Component Description	Ref.	Floor U	Area	UA
	R48 vented Post/Beam (2021 1.4; 2018 1.6)	-	0.020	198	4
	Sum of Area and UA			198	4

Slab on Grade (less than 2 feet below grade)

Plan ID	Component Description	Ref.	Slab F	Slab Perim	FP
	R10 Fully insulated Heated (Code Baseline)	10-2	0.550	210	116
	Sum of Perimeter and FP			210	116

Below Grade Walls and Slabs

Plan ID	Component Description	Slab Depth	Ref.	Wall U	Wall Area	Wall UA	Slab F	Slab Perim	Slab UA
	Sum of Area, Length and UA				0	0.0		0	0

Links to Download Forms, Checklists and Other Resources

	Link
Compliance Certificate	Compliance Certificate; Instructions
Insulation Certificate for Residential New Construction	Insulation Certificate
Duct Testing Affadavits	
Existing Construction	Affidavit, Existing
New Construction	Affidavit, New
Prescriptive Checklist for 2018 WSEC	Prescriptive Checklist
Alterations (Remodel) Worksheet	Worksheet
EER SEER2 COP HSPF2 Converter	https://www.adicotengineering.com/eer-seer2-cop-hspf2-kwton-converter

Show Ventilation Calculator? Show

Ventilation Requirements

Conditioned Floor Area	4,471 sq. ft.
Number of Bedrooms	3
Run-Time Percent in Each 4-Hour Segment	50%
Is the system Balanced?	Unbalanced
Is the system Distributed?	Not Distributed
Ventilation Code Section	IRC, Chapter 15
Whole House Mechanical Ventilation Airflow Rate	225 CFM

Show Distribution System Calculator? Show

HVAC Thermal Distribution System Download RS-33 (2018) http://www.energy.wsu.edu/Documents/Duct%20Testing%20Standards%20_2018%2

Is this a hydronic heating system?	No
Location of Ducts	Conditioned Space
Location of Air Handler	Conditioned Space
Is Duct Testing Required?	Yes

Maximum Duct Leakage:

Maximum total measured duct leakage per square foot	0.08 CFM25 per sq. ft.
Maximum allowable total measured duct leakage	358 CFM25

A maximum of 10 feet of return ducts and 5 feet of supply ducts are allowed to be located outside of the building thermal envelope, if insulated and sealed per R403.3.7.

Show Heating System Sizing? Show

Heating System Sizing - Proposed Design Try Out BetterBuiltNW's HVAC Sizing Tool: https://betterbuiltnw.com/resources/hvac-sizing-tool

Nearest Weather Station	Mercer Island
Indoor Design Temperature	70 F
Outdoor Design Temperature	25 F
Design Temperature Difference (ΔT)	45 F
Conditioned Floor Area, Proposed Design	4,471 ft2
Conditioned Volume (Leave blank to use default of 8.5 ft. ceiling height)	ft3 — Volume assuming ceiling height of 8.5 ft = 38003.5 ft3
HVAC System Type	Heat Pump
Location of HVAC Distribution System	Conditioned Space
Sum of UA, including exempt door and window	853
Envelope Heat Load (Sum of UA X ΔT)	38,367 Btu / Hour
Air Leakage Heat Load ((Volume X 0.6) X ΔT) X .018))	18,470 Btu / Hour
Building Design Heat Load (Air Leakage + Envelope Heat Loss)	56,837 Btu / Hour
Building and Duct Heat Load (For ducts located in unconditioned space: Sum of Building Heat Loss X 1.1; For ducts located in conditioned space or ductless: Sum of Building Heat Loss X 1)	56,837 Btu / Hour
Maximum Heat Equipment Output (Building and Duct Heat Loss X 1.25 for heat pumps; Building and Duct Heat Loss X 1.40 for all other systems)	71,046 Btu / Hour; 20.8 kW

RIPPLE
DESIGN STUDIO
206.913.2333
4303 STONE WAY N
SEATTLE, WA 98103

9790 REGISTERED ARCHITECT
JAMES M DEARTH
STATE OF WASHINGTON

ZIMMER RESIDENCE
4661 FOREST AVE SE MERCER ISLAND, WA 98040

ENERGY FORMS

THIS DRAWING, AS AN INSTRUMENT OF SERVICE, IS + SHALL REMAIN THE SOLE PROPERTY OF RIPPLE DESIGN STUDIO + SHALL NOT BE REPRODUCED, PUBLISHED, OR USED IN ANY MANNER WITHOUT PROPER AUTHORIZATION.
COPYRIGHT © 2017 BY RIPPLE DESIGN STUDIO

RELEASE
7 APRIL 2025

PERMIT CORRECTIONS
9 MAY 2025

PERMIT CORRECTIONS
10 JUNE 2025

PERMIT CORRECTIONS
17 JULY 2025

A1.1

ZIMMER
AUTHORED: 7/17/25

SHORELINE MITIGATION:

LOT AREA	31,383 FT²
SITE AREA 20FT FROM OHWM	1,627 FT²
REQUIRED VEGETATION COVERAGE (75% OF AREA)	1,220 FT²
PROPOSED VEGETATION AREA	1,221 FT²

SHORELINE MITIGATION PLANTING

PLANTING TYPE	COMMON NAME	SCIENTIFIC NAME	SIZE	SPACING	QUANTITY	PLANTING NOTES
PLANT TYPE 01	SHORE PINE	PINUS CONTORTA VAR. CONTORTA	5 GA, 10 FT BALLED BURLAP OR SIM.	9-0" O.C.	6	SUN - PART SHADE, DRY - WET
PLANT TYPE 02	WESTERN CRABAPPLE	MALUS FUSCA	5 GA, 10 FT BALLED BURLAP OR SIM.	9-0" O.C.	4	SUN-PART SHADE, DRY-MOIST
PLANT TYPE 03	SNOWBERRY	SYMPHORICARPOS ALBUS	2 GA, MIN.	4'-6" O.C.	1	SUN-SHADE, DRY-MOIST
PLANT TYPE 04	RED FLOWERING CURRANT	RIBES SANGUINEUM	2 GA, MIN.	4'-0" O.C.	2	SUN - PART SHADE, DRY - MOIST
PLANT TYPE 05	SWORD FERN	POLYSTICHUM MUNITUM	1 GA, MIN.	24" O.C.	3	PART SHADE-SHADE, DRY-MOIST
PLANT TYPE 06	OREGON GRAPE	MAHONIA AQUIFOLIUM	1 GA, MIN.	24" O.C.	4	SUN - SHADE, DRY - WET
PLANT TYPE 07	BEACH STRAWBERRY	FRAGARIA CHILOENSIS	4" POT	24" O.C.	60 SF	SUN - PART SHADE, DRY

MITIGATION LEGEND:

1 - WESTERN CRABAPPLE

2 - SHORE PINE

3 - SNOW BERRY

4 - RED FLOWERING CURRANT

5 - SWORD FERN

6 - OREGON GRAPE

7 - BEACH STRAWBERRY

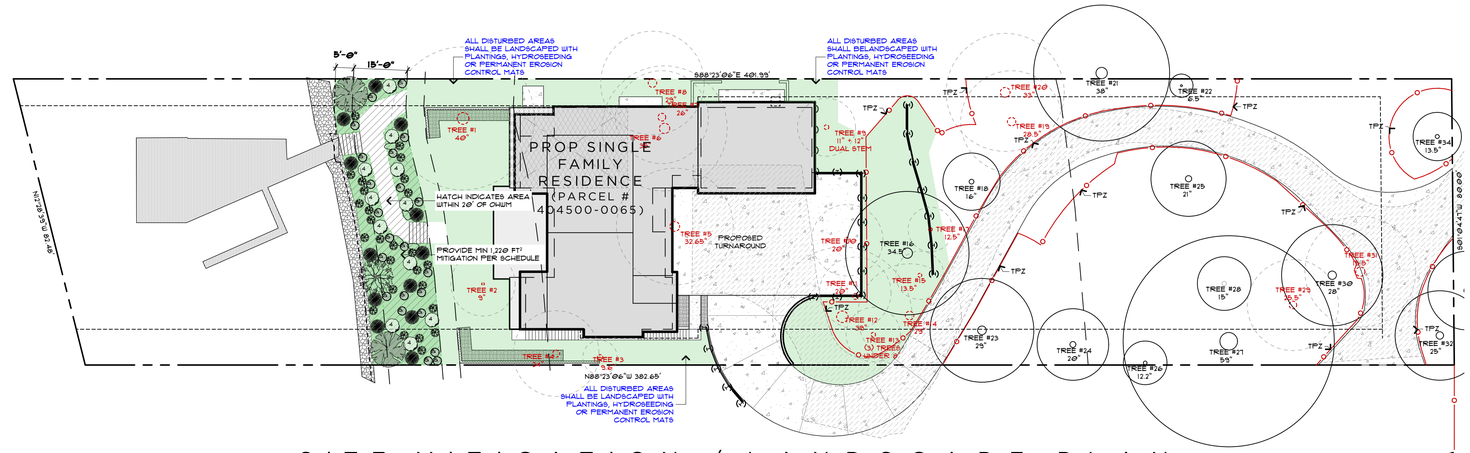

SITE MITIGATION / LANDSCAPE PLAN 1

SCALE: 1" = 20'

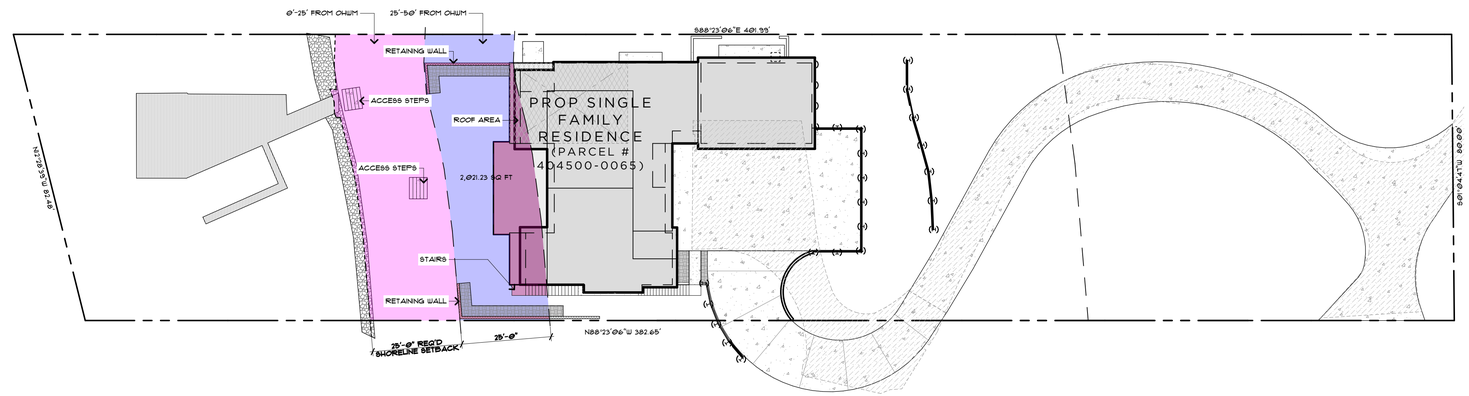

SHORELINE CALCULATION PLAN 2

SCALE: 1" = 20'

HARDSCAPE CALCS:

LOT AREA	31,383 FT²
MAXIMUM ALLOWABLE HARDSCAPE COVERAGE:	(16.3%) 5,118 FT²
(9% OF LOT 2,824 + BORROWED AREA 2,294)	
ALL EXISTING HARDSCAPE TO BE REMOVED	
PROPOSED PAVED AREA (MECH, MID LEVEL NORTH, SUB):	132 FT²
PROPOSED WALKWAYS (SW AUTOCOURT, LOWER SOUTH):	49 FT²
PROPOSED STAIRS (2 SETS):	159 FT²
PROPOSED RETAINING WALLS:	71 FT²
TOTAL PROPOSED HARDSCAPE:	(1.3%) 411 FT²
SHORELINE CALCULATIONS (INCLUDED ABOVE):	3,678 FT²
0'-25' OF OHWM:	2,031 FT²
EXISTING BULKHEAD HARDSCAPE:	74 FT²
PROPOSED LANDSCAPE ACCESS STEPS (2 SETS):	(30+30) 60 FT²
TOTAL HARDSACPE 0'-25':	(6.6%) 134 FT²
25'-50' OF OHWM:	2,021 FT²
PROPOSED RETAINING WALLS:	44 FT²
PROPOSED ROOF AREA:	521 FT²
PROPOSED STAIRS:	30 FT²
TOTAL HARDSCAPE 25'-50':	(29.4%) 595 FT²

RIPPLE
DESIGN STUDIO
206.913.2333
4303 STONE WAY N
SEATTLE, WA 98103

9790 REGISTERED ARCHITECT
JAMES M DEARTH
STATE OF WASHINGTON

ZIMMER RESIDENCE
4661 FOREST AVE SE
MERCER ISLAND, WA
98040

SHORELINE + MITIGATION PLANS

THIS DRAWING, AS AN INSTRUMENT OF SERVICE, IS + SHALL REMAIN THE SOLE PROPERTY OF RIPPLE DESIGN STUDIO + SHALL NOT BE REPRODUCED, PUBLISHED, OR USED IN ANY MANNER WITHOUT PROPER AUTHORIZATION. COPYRIGHT © 2017 BY RIPPLE DESIGN STUDIO

RELEASE

7 APRIL 2025

PERMIT CORRECTIONS
9 MAY 2025

PERMIT CORRECTIONS
10 JUNE 2025

PERMIT CORRECTIONS
17 JULY 2025

A1.2

ZIMMER
AUTHORED: 07/17/25

REPLACEMENT TREE SCHEDULE:

PLANTING TYPE	COMMON NAME	SCIENTIFIC NAME	SIZE	SPACING	QUANTITY	PLANTING NOTES
PLANTING TYPE 01	SHORE PINE	PINUS CONTORTA	6' TALL MIN.	9'-0"	1	SUN - PART SHADE, MOIST - WET
PLANTING TYPE 02	WESTERN CRABAPPLE	MALUS FUSCA	1.5 CAL INCH MIN	9'-0"	2	SUN - PART SHADE, MOIST - WET
PLANTING TYPE 03	PACIFIC YEW	TAXUS BREVIFOLIA	6' TALL MIN.	3'-0"	44	PARTIAL SHADE - SHADE, DRY - MOIST
PLANTING TYPE 04	VINE MAPLE	ACER CIRCINATUM	6' TALL MIN.	9'-0"	7	PART SHADE - SHADE, DRY - MOIST
PLANTING TYPE 05	CASCARA	RHAMNUS PURSHIANA	1.5 CAL INCH MIN.	9'-0"	3	FULL SUN - PART SHADE
PLANTING TYPE 06	QUAKING ASPEN	POPULUS TREMULOIDES	1.5 CAL INCH MIN.	9'-0"	2	FULL SUN - PART SHADE
PLANTING TYPE 07	PACIFIC DOGWOOD	CORNUS NUTTALLI	1.5 CAL INCH MIN.	9'-0"	4	FULL SUN - PART SHADE
			TOTAL REPLACEMENT TREES		63	

TREE CALCULATIONS:

EXISTING TREES:		DBH:	CONDITION:	RETAINED?	MICC 19.16 LIST? (REGULATED)	EXCEPTIONAL?	REPLACEMENT TREES
TREE #1:	QUERCUS PALUSTRIS	40.0 IN	GOOD	NO	YES	YES	6
TREE #2:	STYRAX JAPONICA	9.5 IN	FAIR	NO	NO	NO	0
TREE #3:	ACER CIRCINATUM	9.6 IN	FAIR	NO	YES	YES	6
TREE #4:	PINUS CONTORTA	24.0 IN	FAIR	NO	YES	YES	6
TREE #5:	THUJA PLICATA	32.7 IN	WEAK	NO	YES	NO	3
TREE #6:	PSEUDOTSUGA MENZIESII	35.0 IN	WEAK	NO	YES	YES	6
TREE #7:	PSEUDOTSUGA MENZIESII	26.0 IN	WEAK	NO	YES	NO	3
TREE #8:	THUJA PLICATA	29.0 IN	WEAK	NO	YES	NO	3
TREE #9:	ACER MACROPHYLLUM	16.3 IN	POOR	NO	YES	NO	2
TREE #10:	PSEUDOTSUGA MENZIESII	20.0 IN	POOR	NO	YES	NO	2
TREE #11:	PSEUDOTSUGA MENZIESII	20.0 IN	POOR	NO	YES	NO	2
TREE #12:	PSEUDOTSUGA MENZIESII	39.0 IN	FAIR	NO	YES	YES	6
TREE #13:	ACER MACROPHYLLUM	8.0 IN	WEAK	NO	NO	NO	0
TREE #14:	PSEUDOTSUGA MENZIESII	29.0 IN	WEAK	NO	YES	NO	3
TREE #15:	ACER MACROPHYLLUM	13.3 IN	WEAK	NO	YES	NO	2
TREE #16:	PSEUDOTSUGA MENZIESII	34.3 IN	FAIR	YES	YES	YES	0
TREE #17:	ACER MACROPHYLLUM	12.5 IN	WEAK	NO	YES	NO	2
TREE #18:	ACER MACROPHYLLUM	16.0 IN	FAIR	YES	YES	NO	0
TREE #19:	POPULUS TRICHOCARPA	28.5 IN	WEAK	NO	YES	NO	3
TREE #20:	POPULUS TRICHOCARPA	33.0 IN	WEAK	NO	YES	NO	3
TREE #21:	PSEUDOTSUGA MENZIESII	38.0 IN	FAIR	YES	YES	YES	0
TREE #22:	THUJA PLICATA	6.5 IN	FAIR	YES	NO	NO	0
TREE #23:	PSEUDOTSUGA MENZIESII	29.0 IN	WEAK	YES	YES	NO	0
TREE #24:	ACER MACROPHYLLUM	20.0 IN	FAIR	YES	YES	NO	0
TREE #25:	PSEUDOTSUGA MENZIESII	21.0 IN	FAIR	YES	YES	NO	0
TREE #26:	ACER MACROPHYLLUM	8.0 IN	WEAK	YES	NO	NO	0
TREE #27:	PSEUDOTSUGA MENZIESII	59.0 IN	FAIR	YES	YES	YES	0
TREE #28:	ARBUTUS MENZIESII	15.0 IN	GOOD	YES	YES	YES	0
TREE #29:	ACER MACROPHYLLUM	25.5 IN	WEAK	NO	YES	NO	3
TREE #30:	THUJA PLICATA	28.0 IN	WEAK	YES	YES	NO	0
TREE #31:	FRAXINUS LATIFOLIA	15.5 IN	FAIR	NO	YES	NO	2
TREE #32:	PSEUDOTSUGA MENZIESII	25.0 IN	WEAK	YES	YES	NO	0
TREE #33:	ALNUS RUBRA	22.0 IN	POOR	YES	NO	NO	0
TREE #34:	THUJA PLICATA	13.5 IN	GOOD	YES	YES	NO	0
TOTAL REPLACEMENT TREES REQUIRED							63

TOTAL EXISTING CALIPER:	801.5 IN
PROPOSED CALIPER OF TREES TO REMAIN:	**335.3 IN**
	41.83%

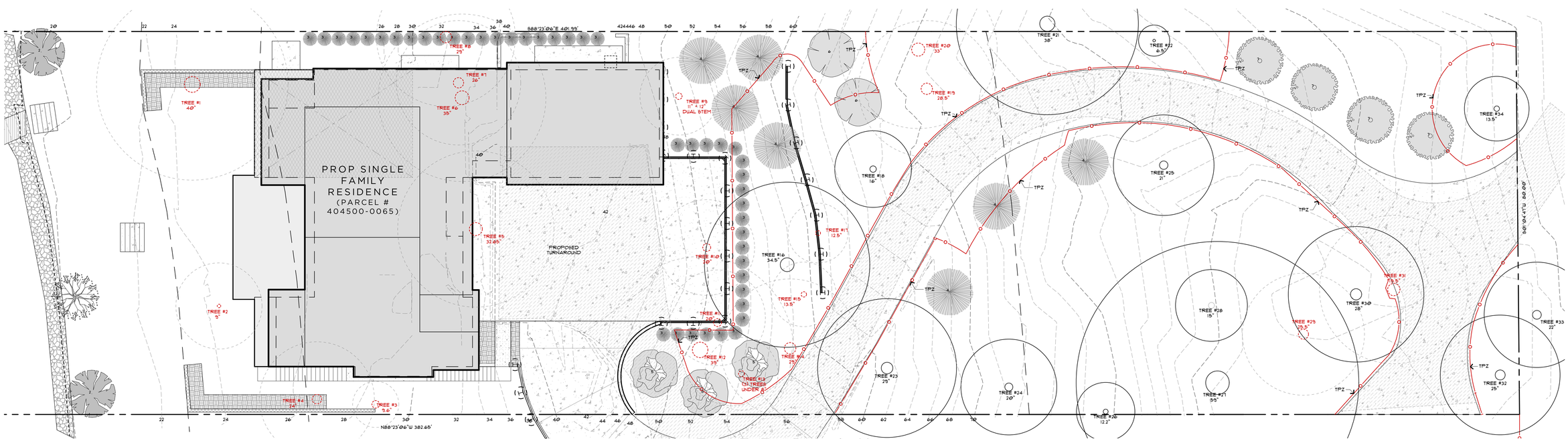

TREE PLAN

SCALE: 1" = 10'

RIPPLE
DESIGN STUDIO
206.913.2333
4303 STONE WAY N
SEATTLE, WA 98103

9790 REGISTERED ARCHITECT
JAMES M DEARTH
STATE OF WASHINGTON

ZIMMER RESIDENCE
4661 FOREST AVE SE
MERCER ISLAND, WA
98040

TREE REMOVAL + REPLACEMENT PLANS + CALCS

THIS DRAWING, AS AN INSTRUMENT OF SERVICE, IS + SHALL REMAIN THE SOLE PROPERTY OF RIPPLE DESIGN STUDIO + SHALL NOT BE REPRODUCED, PUBLISHED, OR USED IN ANY MANNER WITHOUT PROPER AUTHORIZATION. COPYRIGHT © 2017 BY RIPPLE DESIGN STUDIO

RELEASE

7 APRIL 2025

PERMIT CORRECTIONS
9 MAY 2025

PERMIT CORRECTIONS
10 JUNE 2025

PERMIT CORRECTIONS
17 JULY 2025

A1.3

ZIMMER
AUTHORIZED SIGNER

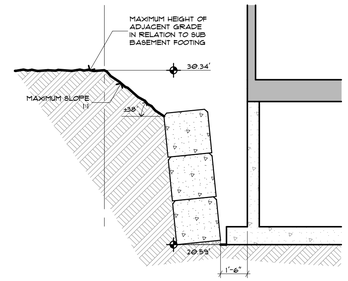

TEMP CUT DIAGRAM 3

SCALE: 1/4" = 1'-0"

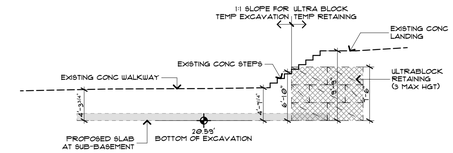

ELEVATION 2

SCALE: 1" = 10'

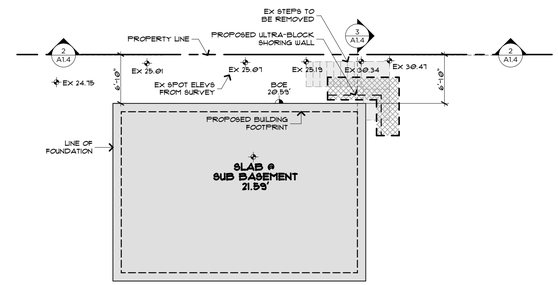

TEMP EX PLAN 1

SCALE: 1" = 10'

RIPPLE
DESIGN STUDIO
206.913.2333
4303 STONE WAY N
SEATTLE, WA 98103

9790 REGISTERED ARCHITECT
JAMES M DEARTH
STATE OF WASHINGTON

ZIMMER RESIDENCE
4661 FOREST AVE SE MERCER ISLAND, WA 98040

TEMPORARY EXCAVATION PLANS AND SECTIONS

THIS DRAWING, AS AN INSTRUMENT OF SERVICE, IS + SHALL REMAIN THE SOLE PROPERTY OF RIPPLE DESIGN STUDIO + SHALL NOT BE REPRODUCED, PUBLISHED, OR USED IN ANY MANNER WITHOUT PROPER AUTHORIZATION.
COPYRIGHT © 2017 BY RIPPLE DESIGN STUDIO

RELEASE
PERMIT CORRECTIONS 10 JUNE 2025
PERMIT CORRECTIONS 17 JULY 2025

A1.4

ZIMMER
AUTHORIZED 7/17/25

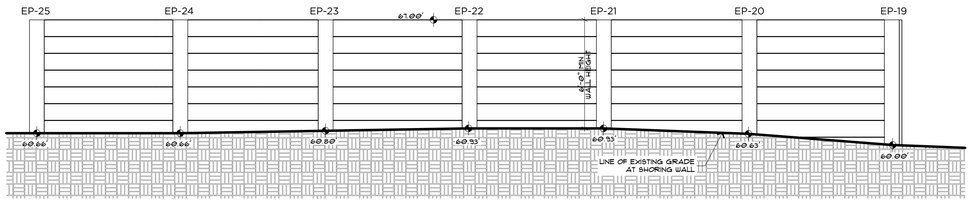

CATCHMENT WALL 8

SCALE: 1/4" = 1'-0"

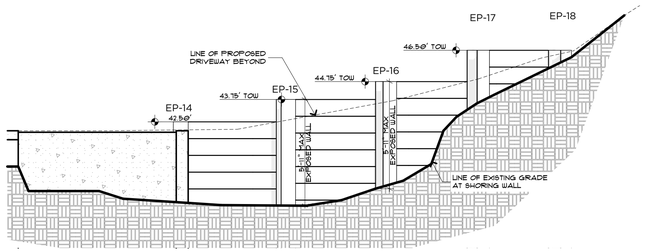

WEST 7

SCALE: 1/4" = 1'-0"

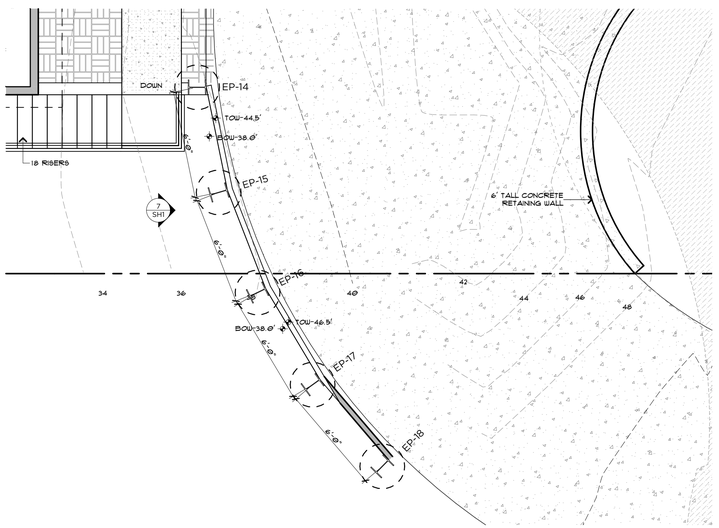

DRIVE SHORING 6

SCALE: 1/4" = 1'-0"

N

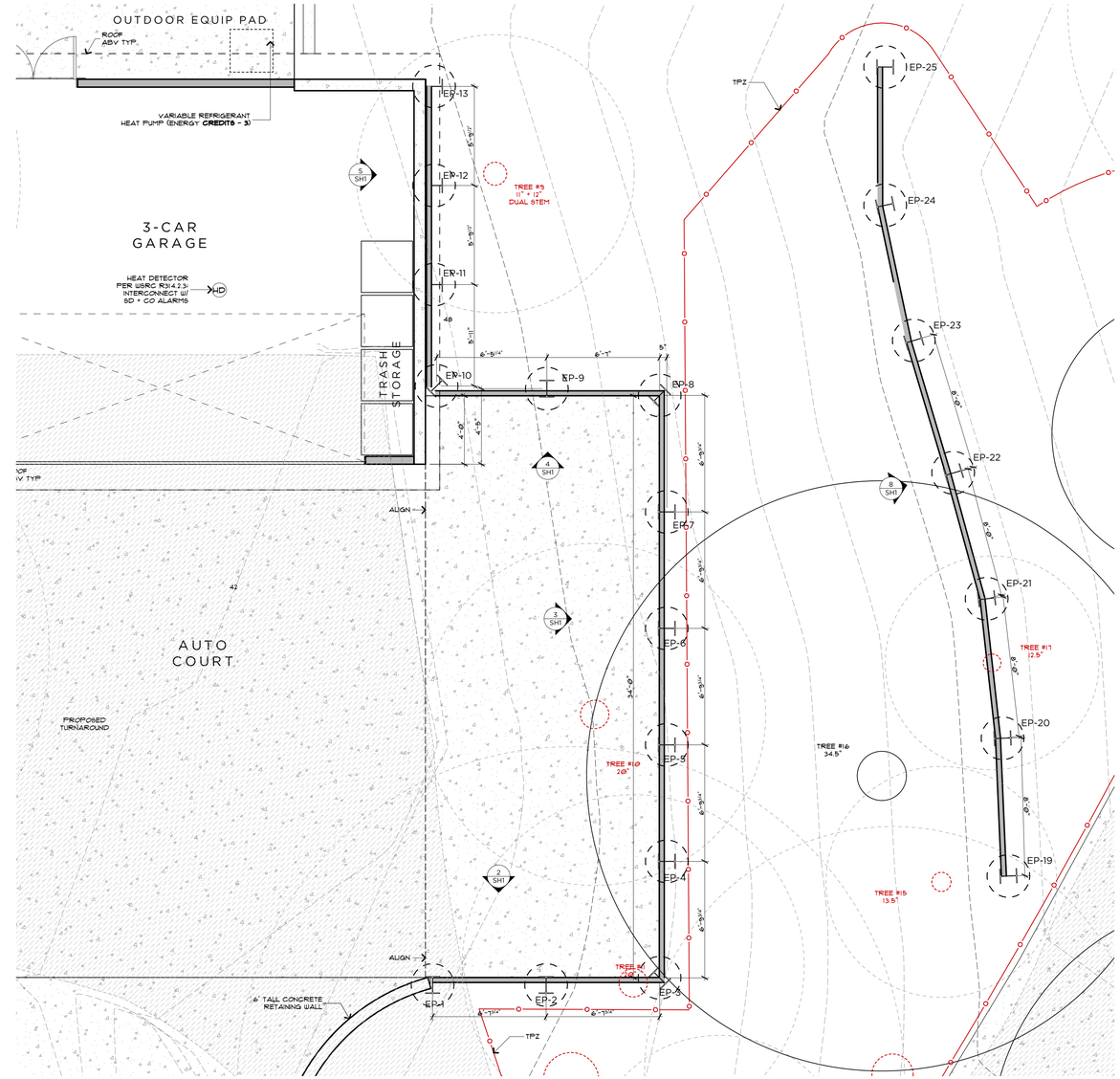

AUTOCOURT SHORING 1

SCALE: 1/4" = 1'-0"

N

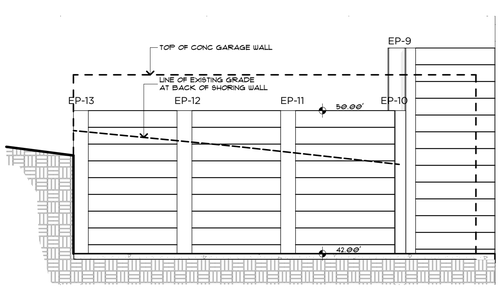

GARAGE WALL 5

SCALE: 1/4" = 1'-0"

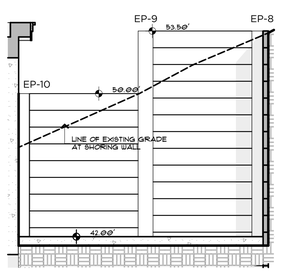

NORTH 4

SCALE: 1/4" = 1'-0"

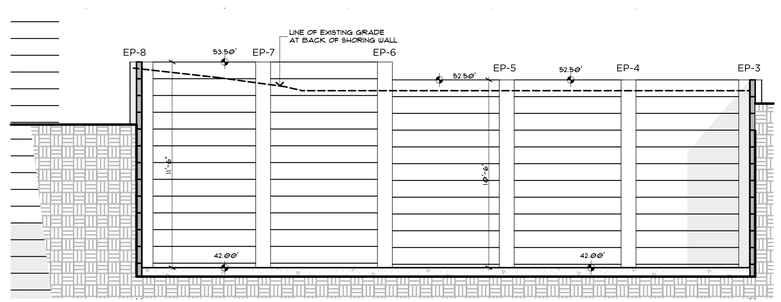

SHORING EAST 3

SCALE: 1/4" = 1'-0"

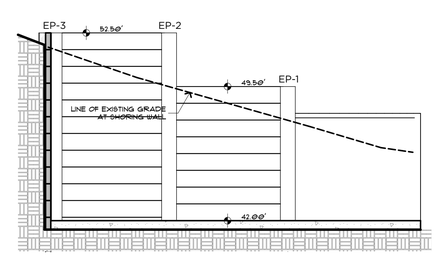

SOUTH 2

SCALE: 1/4" = 1'-0"

RIPPLE
DESIGN STUDIO
206.913.2333
4303 STONE WAY N
SEATTLE, WA 98103

9790 REGISTERED ARCHITECT
JAMES M DEARTH
STATE OF WASHINGTON

ZIMMER RESIDENCE

4661 FOREST AVE SE
MERCER ISLAND, WA
98040

SHORING PLAN

THIS DRAWING, AS AN INSTRUMENT OF SERVICE, IS + SHALL REMAIN THE SOLE PROPERTY OF RIPPLE DESIGN STUDIO + SHALL NOT BE REPRODUCED, PUBLISHED, OR USED IN ANY MANNER WITHOUT PROPER AUTHORIZATION.
COPYRIGHT © 2017 BY RIPPLE DESIGN STUDIO

RELEASE

7 APRIL 2025

PERMIT CORRECTIONS
9 MAY 2025

PERMIT CORRECTIONS
10 JUNE 2025

PERMIT CORRECTIONS
17 JULY 2025

SH1

ZIMMER
AUTHORED: 7/17/25

General Structural Notes

The Following Apply Unless Noted Otherwise on the Drawings

Criteria

1. CODE REQUIREMENTS: ALL DESIGN AND CONSTRUCTION SHALL CONFORM TO THE REQUIREMENTS OF THE INTERNATIONAL BUILDING CODE, 2021 EDITION.

2. REFERENCE DOCUMENTS:

   a. GEOTECHNICAL REPORT BY PanGEO, INC, DATED October, 2024 (Proj #21-552) & SUBSEQUENT REVISIONS.

3. DESIGN LOADS: THE SOIL PRESSURE INDICATED ON THE SOIL PRESSURE DIAGRAMS WHERE USED FOR DESIGN.

4. SOILS INSPECTION: INSPECTION BY THE SOILS ENGINEER SHALL BE PERFORMED FOR PILE PLACEMENT AND TIEBACK PLACING AND STRESSING. ALL PREPARED SOIL BEARING SURFACES SHALL BE INSPECTED BY THE SOILS ENGINEER PRIOR TO PLACEMENT OF PILE. SOIL COMPACTION SHALL BE SUPERVISED/TESTED BY THE GEOTECHNICAL ENGINEER.

5. SPECIAL INSPECTION: SPECIAL INSPECTION OF THE FOLLOWING TYPES OF CONSTRUCTION SHALL BE PROVIDED IN ACCORDANCE WITH SECTIONS 110 AND 1701 OF THE INTERNATIONAL BUILDING CODE AND THE PROJECT SPECIFICATIONS BY A QUALIFIED TESTING AGENCY DESIGNATED BY THE ARCHITECT, AND RETAINED BY THE BUILDING OWNER. THE ARCHITECT, STRUCTURAL ENGINEER, AND BUILDING DEPARTMENT SHALL BE FURNISHED WITH COPIES OF ALL INSPECTION AND TEST RESULTS.

   -STRUCTURAL STEEL FABRICATION AND ERECTION (INCLUDING FIELD WELDING AND HIGH-STRENGTH FIELD BOLTING)
   -PERMANENT CONCRETE CONSTRUCTION PER TABLE 1705.3

6. UTILITY LOCATION: THE SHORING CONTRACTOR SHALL DETERMINE THE LOCATION OF ALL ADJACENT UNDERGROUND UTILITIES PRIOR TO DRILLING PILE HOLES, TIEBACK ANCHORS, OR CUTTING OR DIGGING IN STREETS OR ALLEYS. THE UTILITIES INFORMATION SHOWN ON THE PLANS MAY BE NOT COMPLETE.

7. SPECIAL CONDITIONS: CONTRACTOR SHALL VERIFY ALL DIMENSIONS OF EXISTING STRUCTURES IN THE FIELD AND SHALL NOTIFY THE ENGINEER OF ALL FIELD CHANGES PRIOR TO FABRICATION AND INSTALLATION.

8. SOILS: SEE REPORT OF GEOTECHNICAL INVESTIGATION FOR MORE COMPLETE INFORMATION, INCLUDING RECOMMENDATIONS FOR SHORING IN GENERAL, SHORING MONITORING, EXCAVATION, LAGGING, AND DRAINAGE.

9. SAWN LUMBER: SAWN LUMBER SHALL CONFORM TO "GRADING AND DRESSING RULES,"WEST COAST LUMBER INSPECTION BUREAU (WCLIB), LATEST EDITION. LUMBER SHALL BE THE SPECIES AND GRADE NOTED IN THE LAGGING TABLE.

   TIMBER LAGGING SHALL BE PRESSURE TREATED WITH WATERBORNE PRESERVATIVES IN ACCORDANCE WITH AWPB STANDARD U1 AND SHALL MEET A USE CATEGORY OF UC4B OR BETTER. LAGGING SHALL BE 4X10 UNLESS OTHERWISE NOTED ON DRAWINGS.

10. STEEL SPECIFICATIONS: DESIGN, FABRICATION AND ERECTION SHALL BE IN ACCORDANCE WITH THE LATEST EDITIONS OF THE FOLLOWING SPECIFICATIONS:

    a. STRUCTURAL STEEL: AISC SPECIFICATION FOR STRUCTURAL STEEL BUILDINGS--ALLOWABLE STRESS DESIGN.
    b. WELDING: AWS D1.1.(AWS PREQUALIFIED JOINT DETAILS USE 1/4" MINIMUM WELDS UNLESS NOTED OTHERWISE).
    c. WELDER CERTIFICATION: WASHINGTON ASSOCIATION OF BUILDING OFFICIALS (WABO).

11. STRUCTURAL STEEL SHALL CONFORM TO THE FOLLOWING REQUIREMENTS:

TYPE OF MEMBER	ASTM SPECIFICATION	Fy
WIDE FLANGE	A992	50 KSI
PIPE	A53	35 KSI
PLATES, SHAPES, ANGLES, AND RODS	A36	36 KSI
STRUCTURAL BOLTS	A325-N	
WOOD CONNECTION BOLTS	A307	
WELDING ELECTRODES	E70XX	

Concrete

1. CONCRETE: CONCRETE WORK SHALL CONFORM TO ALL REQUIREMENTS OF CHAPTER 19 OF THE 2018 IBC. CONCRETE STRENGTHS SHALL BE VERIFIED BY STANDARD CYLINDER TESTS, UNLESS APPROVED OTHERWISE. REQUIRED ULTIMATE COMPRESSIVE STRENGTH OF STRUCTURAL GROUT SHALL BE REACHED BY 7 DAYS FOR TIEBACKS AND 28 DAYS FOR PILES.

f'c (psi)	Minimum Cement Per Cubic Yard	Max. Water Per 94 LB Cement	Use
-----	1-1/2 Sacks	-----	Pile & Tieback lean concrete
3,000	6 Sacks (PILING)	6 Gallons	Pile & Tieback struct. grout

   CONCRETE WALL SHALL ATTAIN A 28-DAY STRENGTH OF f'c=3,000 PSI

   AS AN ALTERNATIVE TO THE ABOVE, THE CONTRACTOR SHALL SUBMIT CONCRETE MIX DESIGNS FOR APPROVAL TWO WEEKS PRIOR TO PLACING ANY CONCRETE. THE ALTERNATE MIX DESIGN WILL BE REVIEWED FOR CONFORMANCE TO ACI 318 Ch. 5 WITH SBC REVISIONS.

2. ALL CONCRETE WITH SURFACES EXPOSED TO WEATHER OR STANDING WATER SHALL BE AIR-ENTRAINED WITH AN AIR-ENTRAINING AGENT CONFORMING TO ASTM C260, C494, AND C618. TOTAL AIR CONTENT FOR FROST-RESISTANT CONCRETE SHALL BE IN ACCORDANCE WITH TABLE ACI 318 TABLE 4.2.1 MODERATE EXPOSURE.

3. REINFORCING STEEL SHALL CONFORM TO ASTM A615 (INCLUDING SUPPLEMENT S1), GRADE 60, fy=60,000 PSI. EXCEPTIONS: ANY BARS SPECIFICALLY SO NOTED ON THE DRAWINGS SHALL BE GRADE 40, fy=40,000 PSI. WELDED WIRE FABRIC SHALL CONFORM TO ASTM A-185. SPIRAL REINFORCEMENT SHALL BE PLAIN WIRE CONFORMING TO ASTM A615, GRADE 60, fy=60,000 PSI.

Pipe and Lagging Construction

1. DEMOLITION: SHORING AND SOIL EXCAVATION SHALL BE DONE SIMULTANEOUSLY.

2. VERIFICATION: DIMENSIONS AND LOCATION OF EXISTING STRUCTURES SHALL BE VERIFIED PRIOR TO FABRICATION AND INSTALLATION OF ANY STRUCTURAL MEMBER. NOTIFY ENGINEER ABOUT ANY DISCREPANCIES PRIOR TO FABRICATION.

3. STEEL PILE PLACEMENT TOLERANCES:

   1" INSIDE PERPENDICULAR TO SHORING WALL.
   1" OUTSIDE PERPENDICULAR TO SHORING WALL.
   3" LATERALLY.

4. LAGGING: TIMBER LAGGING SHALL BE INSTALLED IN ALL AREAS. VOIDS BETWEEN LAGGING AND SOIL SHALL BE BACKFILLED. DRAINAGE BEHIND THE WALL MUST BE MAINTAINED. IT IS CONTRACTOR'S RESPONSIBILITY TO LIMIT THE AMOUNT OF EXPOSED SOIL WITHOUT LAGGING TO AVOID LOSS OF SOIL. MAXIMUM HEIGHT OF 4 FEET IS RECOMMENDED. SPECIAL CARE SHOULD BE TAKEN TO AVOID GROUND LOSS DURING EXCAVATION.

5. SHORING MONITORING: A SYSTEMATIC PROGRAM OF OBSERVATION SHALL BE CONDUCTED DURING THE PROJECT EXECUTION TO DETERMINE THE EFFECT OF CONSTRUCTION ON ADJACENT FACILITIES AND STRUCTURES IN ORDER TO PROTECT THEM FROM DAMAGE. REFER TO REPORT OF GEOTECHNICAL INVESTIGATION FOR RECOMMENDATIONS. FIELD DATA AND MEASUREMENTS ARE TO BE SUBMITTED TO STRUCTURAL AND GEOTECHNICAL ENGINEER FOR REVIEW.

   MONITORING PLAN SHALL INCLUDE THE FOLLOWING:

   - THE TOP OF EVERY OTHER SOLDIER PILE SHALL BE MONITORED TWICE A WEEK DURING EXCAVATION FOR LAGGING INSTALLATION. BASED ON THOSE MONITORING RESULTS, THE MONITORING FREQUENCY MAY BE REDUCED TO ONCE A WEEK AFTER THE FOUNDATION IS COMPLETED.
   - ADJACENT STRUCTURES OR RETAINING WALLS LOCATED WITHIN 20 FEET OF THE PLANNED SHORING WALL SHALL BE MONITORED AT ESTABLISHED OPTICAL SURVEY POINTS.
   - ESTABLISH A BASELINE READING OF MONITORING POINTS ON THE GROUND SURFACE AND SETTLEMENT-SENSITIVE STRUCTURES BEHIND THE SHORING WALL ALIGNMENT PRIOR TO EXCAVATION AND INSTALLATION OF THE SHORING SYSTEMS.
   - A LICENSED SURVEYOR MUST DO THE SURVEYING AT LEAST ONCE A WEEK.
   - THE GEOTECHNICAL ENGINEER SHALL REVIEW SURVEY DATA AND PROVIDE AN EVALUATION OF WALL PERFORMANCE ALONG WITH SURVEY DATA TO DPD AND SDOT ON AT LEAST A WEEKLY BASIS. IMMEDIATELY AND DIRECTLY, NOTIFY DPD AND SDOT IF ANY UNUSUAL OR SIGNIFICANTLY INCREASED MOVEMENT OCCURS.
   - IMMEDIATELY AND DIRECTLY NOTIFY THE GEOTECHNICAL AND STRUCTURAL ENGINEERS, IF 0.5 INCHES OF MOVEMENT OCCURS BETWEEN TWO CONSECUTIVE READINGS AND WHEN TOTAL MOVEMENTS REACH 0.5 INCH. AT THAT AMOUNT OF MOVEMENT, THE ENGINEERS AND DESIGNERS SHALL DETERMINE THE CAUSE OF DISPLACEMENT AND DEVELOP REMEDIAL MEASURES SUFFICIENT TO LIMIT TOTAL WALL MOVEMENTS TO WHAT HAS BEEN DEFINED AS ACCEPTABLE BY THE DESIGN TEAM.

buker ENGINEERING LLC
4303 Stone Way N
Seattle, WA 98103
206.258.6333

DANIEL R. BUKER
STATE OF WASHINGTON
44090
STRUCTURAL ENGINEER
PROFESSIONAL ENGINEER

Zimmer Residence

4661 Forest Ave SE
Mercer Island, WA, 98040

No.	Date	Issue
	11/13/24	Permit
	4/2/25	Corrections
	4/17/25	Revisions
1	5/7/25	Corrections
2	6/2/25	Corrections

Sheet Contents

General Structural Notes

Sheet No.

SH2

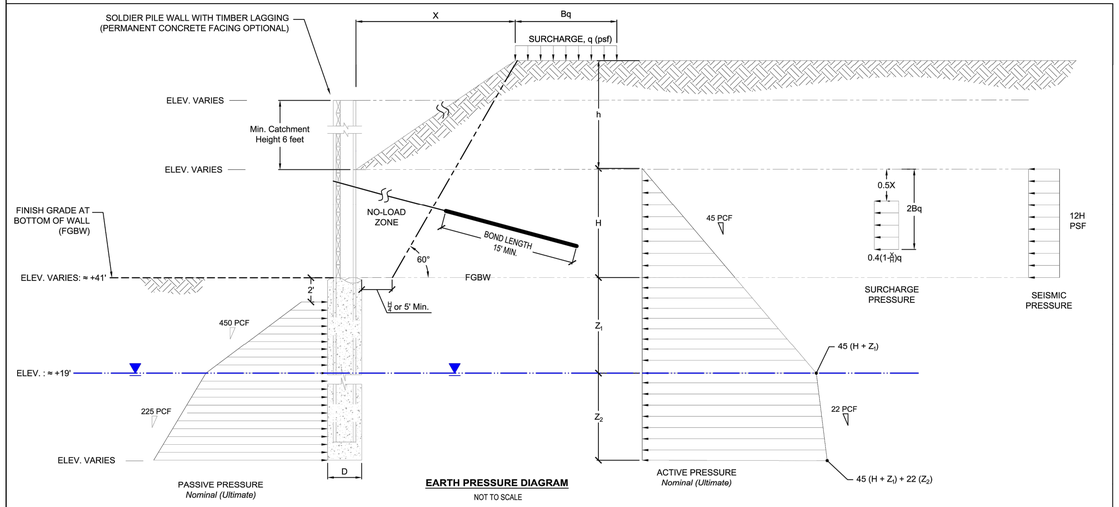

EARTH PRESSURE DIAGRAM

NOT TO SCALE

NOTES:

1. Embedment (Z) should be determined by summation of moments at the bottom of the soldier piles or at ground anchor location if present. Minimum pile embedment should be at least 10 feet below bottom of excavation, or deeper as determined by structural analysis.
2. Active and Passive earth pressure values shown are nominal (ultimate) values. Factors of safety of 1.5 and 1.15 should be applied to the passive earth pressure values for static and seismic loading conditions, respectively. No load factors have been applied to the recommended active earth pressures.
3. Apply active and surcharge pressures over the full width of the pile spacing above the base of the excavation and over one pile diameter below the base of the excavation.
4. Apply passive pressures over two times the pile diameter (D) below the base of the excavation.
5. Use 50% of the active and surcharge pressures for lagging design with soldier piles spaced at 8-ft or less.
6. Anchor design provided by others.
7. Allowable vertical soldier pile capacity:
   Skin Friction = 1.0 ksf (Below Elev. 38 ft)
   End Bearing = 30 ksf
8. For seismic condition, combine the seismic pressure (psf) with the static (active and surcharge) pressures.
9. Refer to the report text for anchor recommendations and additional discussions.

PanGEO INCORPORATED	Zimmer Residence 4661 Forest Avenue SE Mercer Island, Washington	DESIGN LATERAL PRESSURES PERMANENT SOLDIER PILE / CATCHEMENT WALL CANTILEVERED OR SINGLE TIEBACK *STATIC & SEISMIC CONDITIONS*	
		PROJECT NO. 21-552	FIGURE NO. 11

DRAWN BY: NTW CHECKED BY: FMKK DATE: 2024.10.21

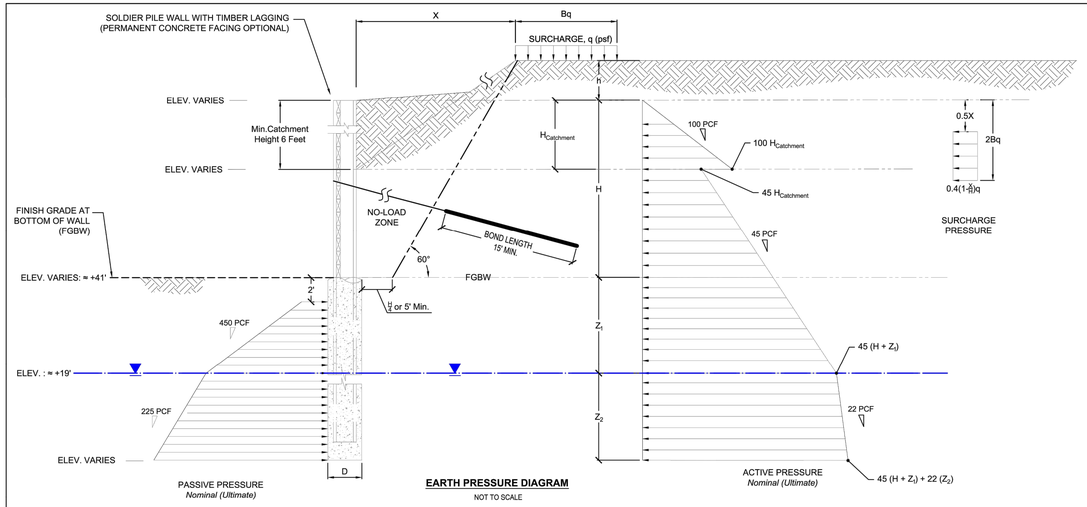

EARTH PRESSURE DIAGRAM

NOT TO SCALE

NOTES:

1. Embedment (Z) should be determined by summation of moments at the bottom of the soldier piles or at ground anchor location if present. Minimum pile embedment should be at least 10 feet below bottom of excavation, or deeper as determined by structural analysis.
2. Active and Passive earth pressure values shown are nominal (ultimate) values. A factor of safety of 1.15 should be applied to the passive passive earth pressure values for the dynamic (moment of slide impact) loading condition. No load factor has been applied to the recommended active earth pressure values.
3. Apply active and surcharge pressures over the full width of the pile spacing above the base of the excavation and over one pile diameter below the base of the excavation.
4. Apply passive pressures over two times the pile diameter (D) below the base of the excavation.
5. Use 50% of the active and surcharge pressures for lagging design with soldier piles spaced at 8-ft or less.
6. Anchor design provided by others.
7. Allowable vertical soldier pile capacity:
   Skin Friction = 1.0 ksf (Below Elev. 38 ft)
   End Bearing = 30 ksf
8. Refer to the report text for anchor recommendations and additional discussions.

PanGEO INCORPORATED	Zimmer Residence 4661 Forest Avenue SE Mercer Island, Washington	DESIGN LATERAL PRESSURES PERMANENT SOLDIER PILE / CATCHEMENT WALL CANTILEVERED OR SINGLE TIEBACK *DYNAMIC IMPACT SLIDE CONDITION*	
		PROJECT NO. 21-552	FIGURE NO. 12

DRAWN BY: NTW CHECKED BY: FMKK DATE: 2024.10.21

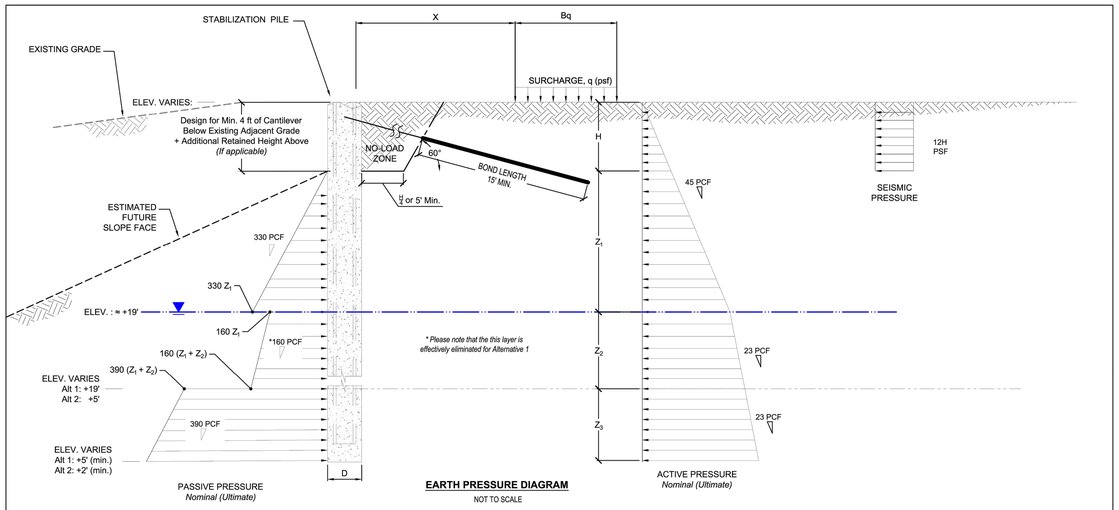

EARTH PRESSURE DIAGRAM

NOT TO SCALE

NOTES:

1. Embedment (Z) should be determined by summation of moments at the bottom of the piles or at ground anchor if present. Minimum pile tip elevation (Z) for the stabilization piles should be +5 feet (Alt 1), +2 feet (Alt 2); or deeper as determined by structural analysis.
2. Active and Passive earth pressure value shown are nominal values. Factors of safety of 1.5 and 1.15 should be applied to the passive earth pressure values for static and seismic loading conditions, respectively. No load factors have been applied to the recommended active earth pressures.
3. Apply active and surcharge pressures over the full width of the pile spacing above the base of the excavation and over one pile diameter below the base of the excavation.
4. Apply passive pressures over two times the pile diameter (D) below the base of the excavation.
5. Use 50% of the active and surcharge pressures for lagging design with soldier piles spaced at 8-ft or less.
6. Anchor design provided by others. Refer to the report text for anchor recommendations and additional discussions.
7. Allowable vertical soldier pile capacity:
   Skin Friction = 1.0 ksf (Below the estimated future slope face: Approx. 4 feet below existing adjacent grade)
   End Bearing = 30 ksf
8. For seismic condition, combine the seismic pressure (psf) with the static (active and surcharge pressures)
9. Vertical Datum: NAVD 88

PanGEO INCORPORATED	Zimmer Residence 4661 Forest Avenue SE Mercer Island, Washington	DESIGN LATERAL PRESSURES LOWER PERMANENT STABILIZATION PILES CANTILEVERED OR SINGLE TIEBACK *STATIC & SEISMIC CONDITIONS*	
		PROJECT NO. 21-552	FIGURE NO. 13

DRAWN BY: NTW CHECKED BY: FMKK DATE: 2024.10.25

buker ENGINEERING LLC
4303 Stone Way N
Seattle, WA 98103
206.258.6333

Zimmer Residence

4661 Forest Ave SE
Mercer Island, WA, 98040

No.	Date	Issue
	11/13/24	Permit
	4/2/25	Corrections
	4/17/25	Revisions
1	5/7/25	Corrections
2	6/2/25	Corrections

Sheet Contents

SHORING DETAILS

Sheet No.

SH3

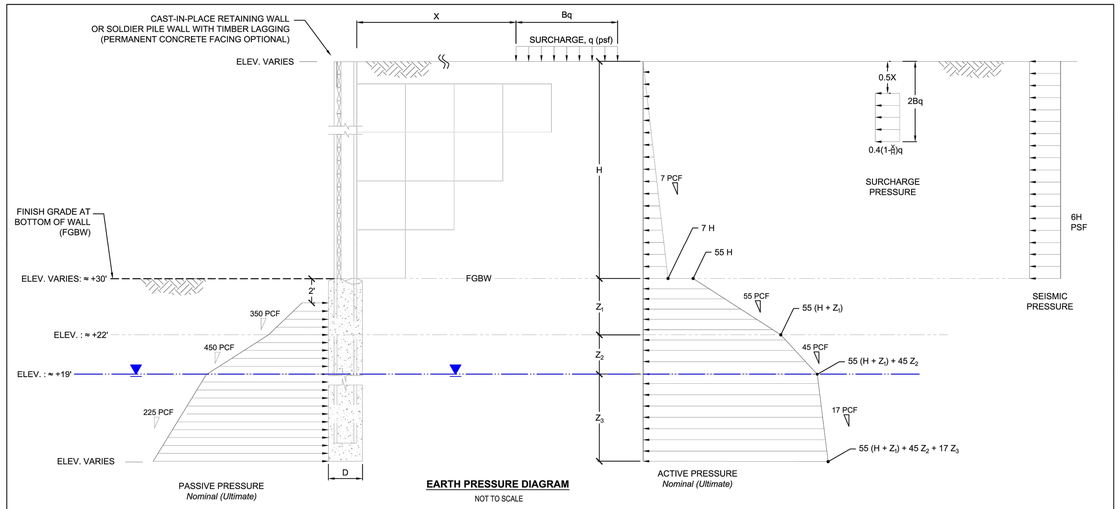

EARTH PRESSURE DIAGRAM

NOT TO SCALE

NOTES:

1. The embedment (Z) for soldier piles should be determined by summation of moments at the bottom of the soldier piles or at ground anchor location if present. Minimum pile embedment should be at least 10 feet below bottom of excavation, or deeper as determined by structural analysis.
2. Active and Passive earth pressure values shown are nominal (ultimate) values. Factors of safety of 1.5 and 1.15 should be applied to the passive earth pressure values for static and seismic loading conditions, respectively. No load factors have been applied to the recommended active earth pressure values.
3. Apply active and surcharge pressures over the full width of the pile spacing above the base of the excavation and over one pile diameter below the base of the excavation.
4. Apply passive pressures over two times the pile diameter (D) below the base of the excavation.
5. Use 50% of the active and surcharge pressures for lagging design with soldier piles spaced at 8-ft or less.
7. Allowable vertical soldier pile capacity:
   Skin Friction = 1.0 ksf (Below Elev. 22 ft)
   End Bearing = 30 ksf
8. For seismic condition, combine the seismic pressure (psf) with the static (active and surcharge pressures).
9. Refer to the report text for geofoam recommendations and additional discussions.

DRAWN BY: KTW CHECKED BY: RMX DATE: 2024-10-21

PanGEO INCORPORATED	Zimmer Residence 4661 Forest Avenue SE Mercer Island, Washington	DESIGN LATERAL PRESSURES SFR BASEMENT WALL W/ GEOFOAM BACKFILL *STATIC & SEISMIC CONDITIONS* PROJECT NO. 21-552 — FIGURE NO. 9

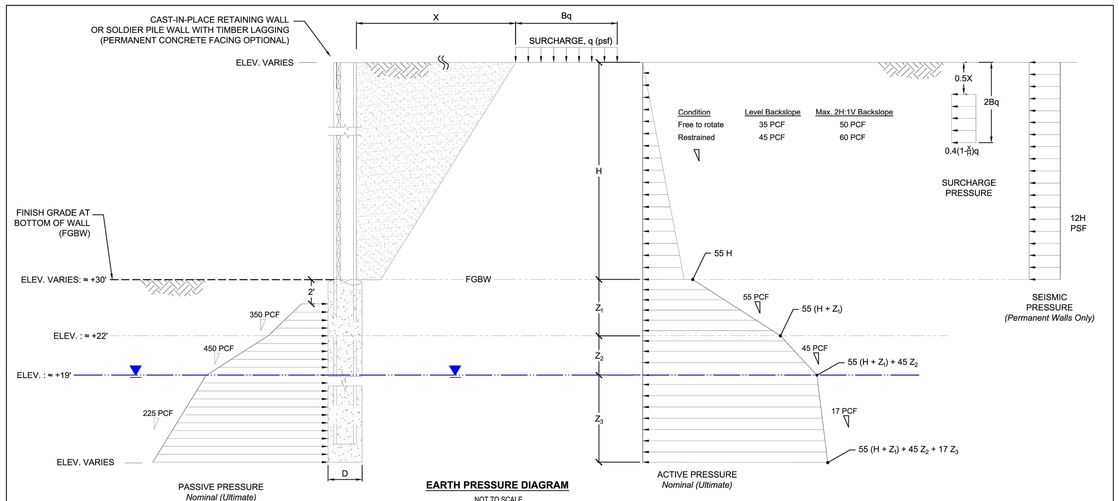

EARTH PRESSURE DIAGRAM

NOT TO SCALE

NOTES:

1. The embedment (Z) for soldier piles should be determined by summation of moments at the bottom of the soldier piles or at ground anchor location if present. Minimum pile embedment should be at least 10 feet below bottom of excavation, or deeper as determined by structural analysis.
2. Active and Passive earth pressure values shown are nominal (ultimate) values. Factors of safety of 1.5 and 1.15 should be applied to the passive earth pressure values for static and seismic loading conditions, respectively. No load factors have been applied to the recommended active earth pressure values.
3. Apply active and surcharge pressures over the full width of the pile spacing above the base of the excavation and over one pile diameter below the base of the excavation.
4. Apply passive pressures over two times the pile diameter (D) below the base of the excavation.
5. Use 50% of the active and surcharge pressures for lagging design with soldier piles spaced at 8-ft or less.
7. Allowable vertical soldier pile capacity:
   Skin Friction = 1.0 ksf (Below Elev. 22 ft)
   End Bearing = 30 ksf
8. For seismic condition, combine the seismic pressure (psf) with the static (active and surcharge pressures).
9. Refer to the report text for geofoam recommendations and additional discussions.

DRAWN BY: KTW CHECKED BY: RMX DATE: 2024-10-21

PanGEO INCORPORATED	Zimmer Residence 4661 Forest Avenue SE Mercer Island, Washington	DESIGN LATERAL PRESSURES SFR BASEMENT WALL WITHOUT GEOFOAM BACKFILL *STATIC & SEISMIC CONDITIONS* PROJECT NO. 21-552 — FIGURE NO. 10

buker ENGINEERING LLC
4303 Stone Way N
Seattle, WA 98103
206.258.6333

DANIEL R. BUKER — STATE OF WASHINGTON — 44090 — STRUCTURAL ENGINEER — PROFESSIONAL ENGINEER

Zimmer Residence

4661 Forest Ave SE
Mercer Island, WA, 98040

No.	Date	Issue
	11/13/24	Permit
	4/2/25	Corrections
	4/17/25	Revisions
1	5/7/25	Corrections
2	6/2/25	Corrections

Sheet Contents

SHORING DETAILS

Sheet No.

SH4

PILE NAME	WIDE FLANGE SIZE	TYPE	AUGER DIAMETER (in)	TOP ELEVATION (ft)	BASE OF EXCAVATION ELEVATION (ft)	MAXIMUM RETAINED HEIGHT (ft)	DESIGN "H" (ft)	SHAFT TIP ELEVATION (ft)	DESIGN "D" (ft)
EP-1	W14x48	CANTILEVER	30	50.00	41.00	9.00	9.00	27.00	14.00
EP-2	W14x48	CANTILEVER	30	50.00	41.00	9.00	9.00	27.00	14.00
EP-3	W14x132	CANTILEVER	30	52.50	41.00	11.50	12.50	23.00	18.00
EP-4	W14x132	CANTILEVER	30	52.50	41.00	11.50	12.50	23.00	18.00
EP-5	W14x132	CANTILEVER	30	52.50	41.00	11.50	12.50	23.00	18.00
EP-6	W14x132	CANTILEVER	30	52.50	41.00	11.50	12.50	23.00	18.00
EP-7	W14x132	CANTILEVER	30	53.50	41.00	12.50	12.50	23.00	18.00
EP-8	W14x132	CANTILEVER	30	53.50	41.00	12.50	12.50	23.00	18.00
EP-9	W14x132	CANTILEVER	30	53.50	41.00	12.50	12.50	23.00	18.00
EP-10	W14x48	CANTILEVER	30	50.00	41.00	9.00	9.00	27.00	14.00
EP-11	W14x48	CANTILEVER	30	50.00	41.00	9.00	9.00	27.00	14.00
EP-12	W14x48	CANTILEVER	30	50.00	41.00	9.00	9.00	27.00	14.00
EP-13	W14x48	CANTILEVER	30	50.00	41.00	9.00	9.00	27.00	14.00
EP-14	W12x30	CANTILEVER	24	42.50	36.50	6.00	6.00	25.50	11.00
EP-15	W12x30	CANTILEVER	24	44.00	38.00	6.00	6.00	27.00	11.00
EP-16	W12x30	CANTILEVER	24	46.00	38.00	6.00	6.00	29.00	11.00
EP-17	W12x30	CANTILEVER	24	48.00	42.00	6.00	6.00	31.00	11.00
EP-18	W12x30	CANTILEVER	24	48.00	42.00	6.00	6.00	31.00	11.00
EP-19	W12x45	CANTILEVER	24	67.00	60.00	6.00	6.00	43.00	17.00
EP-20	W12x45	CANTILEVER	24	67.00	60.00	6.00	6.00	43.00	17.00
EP-21	W12x45	CANTILEVER	24	67.00	60.00	6.00	6.00	43.00	17.00
EP-22	W12x45	CANTILEVER	24	67.00	60.00	6.00	6.00	43.00	17.00
EP-23	W12x45	CANTILEVER	24	67.00	60.00	6.00	6.00	43.00	17.00
EP-24	W12x45	CANTILEVER	24	67.00	60.00	6.00	6.00	43.00	17.00
EP-25	W12x45	CANTILEVER	24	67.00	60.00	6.00	6.00	43.00	17.00

Additional Pile Notes

- ACTUAL PILE RETAINING HEIGHT MAY VARY. IF REQUIRED HEIGHT IS HIGHER THAN SPECIFIED, COORDINATE WITH STRUCTURAL ENGINEER.
- PILE MAY NEED TO EXTEND ABOVE MINIMUM HEIGHT TO SUPPORT LAGGING FROM ADJACENT PILE, COORDINATE THE ACTUAL HEIGHT IN FIELD.
- ACTUAL PILE SPACING AND QUANTITY TO BE COORDINATED w/ FIELD CONDITIONS BY THE CONTRACTOR. PILE SPACING SHOWN IS THE MAXIMUM ALLOWED SPACING. ADDITIONAL PILES MAY BE REQUIRED AT EACH END OF WALL. CONTACT ENGINEER OF RECORD FOR APPROVAL OF FINAL PILE CONFIGURATION PRIOR TO INSTALLATION.

Lagging Schedule

Location*	Lagging Size
0' - 12'-6"	P.T. 4x10 DF-L #2

* Location indicates distance below top of excavation

2

1 Pile and Lagging Schedule
SCALE: 3/4"=1'-0"

- SCALE: 3/4"=1'-0"

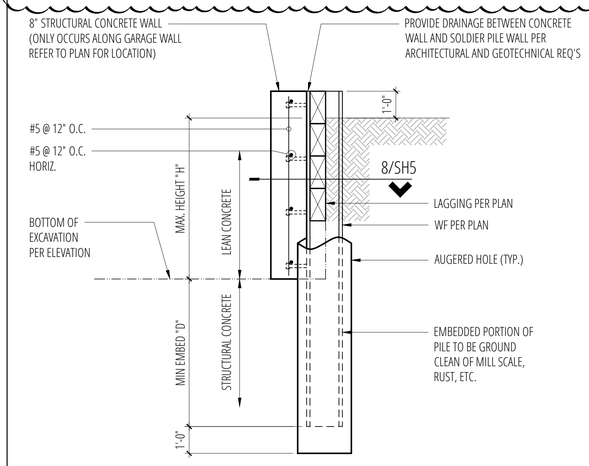

7 Cantilever Pile
SCALE: 3/4"=1'-0"

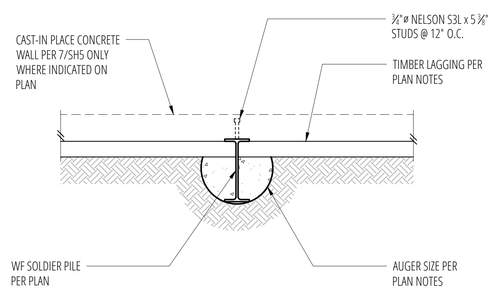

8 Pile - Small Auger
SCALE: 3/4"=1'-0"

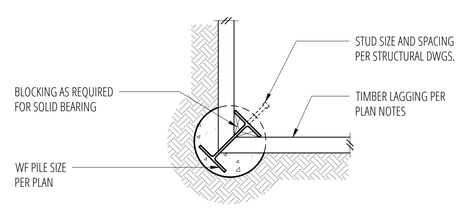

9 Auger Pile - Inside Corner
SCALE: 3/4"=1'-0"

- SCALE: 3/4"=1'-0"

buker ENGINEERING LLC
4303 Stone Way N
Seattle, WA 98103
206.258.6333

DANIEL R. BUKER
STATE OF WASHINGTON
44090
STRUCTURAL ENGINEER
PROFESSIONAL ENGINEER

Zimmer Residence

4661 Forest Ave SE
Mercer Island, WA, 98040

No.	Date	Issue
	11/13/24	Permit
	4/2/25	Corrections
	4/17/25	Revisions
1	5/7/25	Corrections
2	6/2/25	Corrections

Sheet Contents

SHORING DETAILS

Sheet No.

SH5

EROSION CONTROL LEGEND

LIMITS OF DISTURBANCE		
FILTER FABRIC FENCE (SILT FENCE)	SF	
STABILIZED CONSTRUCTION ENTRANCE	CE	
CATCH BASIN INLET PROTECTION	IP	
TREE PROTECTION FENCING	TP	
STRAW WATTLES	SW	USE AS NEEDED

LEGAL DESCRIPTION

LOT 14 AND THE NORTH 30 FEET OF LOT 13, LAKE ISLE, ACCORDING TO THE PLAT THEREOF, RECORDED IN VOLUME 19 OF PLATS, PAGE 35, RECORDS OF KING COUNTY, WASHINGTON;

TOGETHER WITH SECOND CLASS SHORELANDS ADJOINING.

SITUATE IN THE COUNTY OF KING, STATE OF WASHINGTON.

ORGANIC SOIL REQUIREMENT

MINIMUM 10% ORGANIC MULCH & COMPOST SOIL REQUIRED

SOIL AMENDMENT REQUIRED

COMPOST AMENDED SOIL REQUIRED ON ALL LANDSCAPED AREAS AFTER CONSTRUCTION. SEE DETAIL ON C3.5.

SOIL INSPECTION REQUIRED BY ENGINEER

A POST CONSTRUCTION INSPECTION & CERTIFICATION OF AMENDED SOILS IS REQUIRED BY A LICENSED CIVIL ENGINEER. THIS IS REQUIRED BEFORE FINAL SIGN-OFF BY CITY.

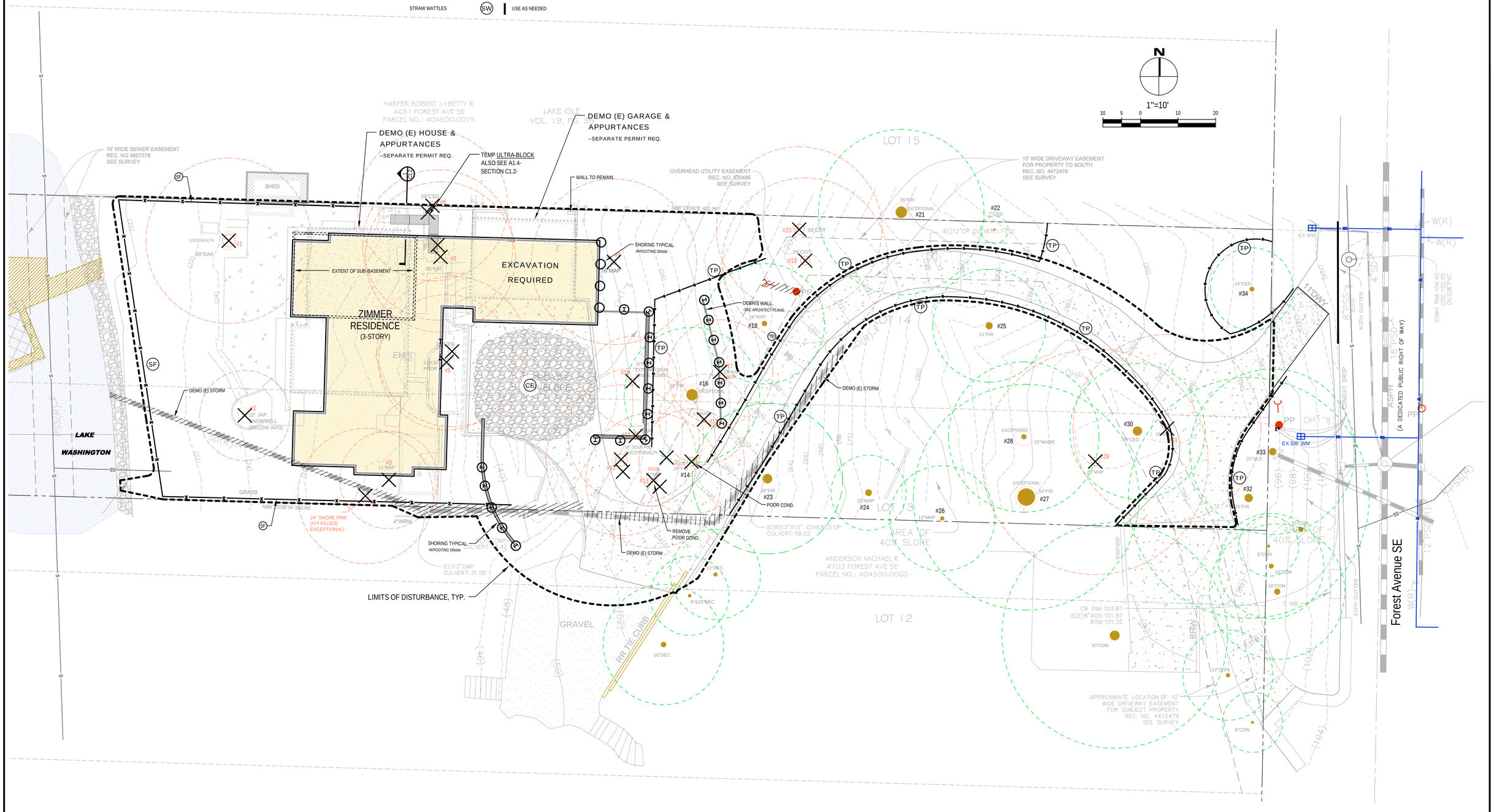

NO.	DATE	BY	REVISIONS

APPLICANT
DAVID AND KAREN ZIMMER

DATE: Jun 09, 2025
JOB# 2033
DRAFTEDSS DESIGN:DE
DIGITAL SIGNATURE

Jun 09, 2025
JEFFREY E. KILLIAN
STATE OF WASHINGTON
39796
REGISTERED PROFESSIONAL ENGINEER

CIVIL ENGINEERING SOLUTIONS
701 N. 36th STREET, SUITE 450
PHONE: 206.930.0342
SEATTLE, WA 98103
DUFFY@CESOLUTIONS.US

TESC PLAN
TREE RETENTION PLAN

ZIMMER RESIDENCE
4661 FOREST AVENUE SE, MERCER ISLAND, WA 98040

DRAWING NO:
C1.0

APN 404500-0065

SECTION 1: TEMPORARY ULTRA BLOCK SHORING

(1 / C1.2)

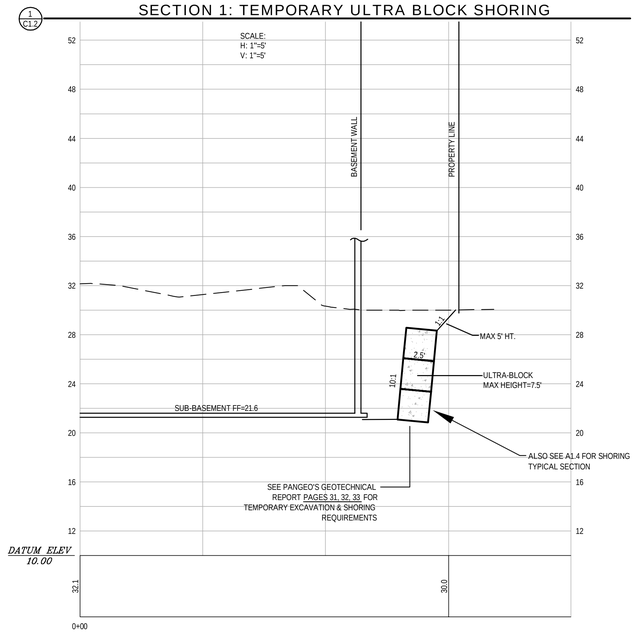

SILT FENCE DETAIL DOE

Figure II-3.22: Silt Fence

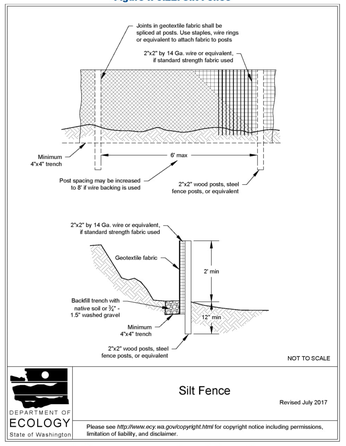

2019 Stormwater Management Manual for Western Washington

Volume II - Chapter 3 - Page 371

CONSTRUCTION ENTRANCE DOE

Figure II-3.1: Stabilized Construction Access

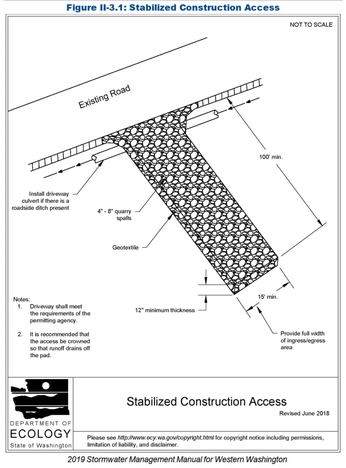

2019 Stormwater Management Manual for Western Washington

Volume II - Chapter 3 - Page 279

RECOMMENDED CONSTRUCTION SEQUENCE

A DETAILED CONSTRUCTION SEQUENCE IS NEEDED TO ENSURE THAT EROSION AND SEDIMENT CONTROL MEASURES ARE APPLIED AT THE APPROPRIATE TIMES. A RECOMMENDED CONSTRUCTION SEQUENCE IS PROVIDED BELOW:

1. HOLD AN ONSITE PRE-CONSTRUCTION MEETING.

2. POST SIGN WITH NAME AND PHONE NUMBER OF ESC SUPERVISOR (MAY BE CONSOLIDATED WITH THE REQUIRED NOTICE OF CONSTRUCTION SIGN).

3. FLAG OR FENCE CLEARING LIMITS.

4. INSTALL CATCH BASIN PROTECTION, IF REQUIRED.

5. GRADE AND INSTALL CONSTRUCTION ENTRANCE(S).

6. INSTALL PERIMETER PROTECTION (SILT FENCE, BRUSH BARRIER, ETC.).

7. CONSTRUCT SEDIMENT PONDS AND TRAPS.

8. GRADE AND STABILIZE CONSTRUCTION ROADS.

9. CONSTRUCT SURFACE WATER CONTROLS (INTERCEPTOR DIKES, PIPE SLOPE DRAINS, ETC.) SIMULTANEOUSLY WITH CLEARING AND GRADING FOR PROJECT DEVELOPMENT.

10. MAINTAIN EROSION CONTROL MEASURES IN ACCORDANCE WITH CITY OF MERCER ISLAND STANDARDS AND MANUFACTURER'S RECOMMENDATIONS.

11. RELOCATE SURFACE SURFACE WATER CONTROLS OR TESC MEASURES, OR INSTALL NEW MEASURES SO THAT AS SITE CONDITIONS CHANGE, THE TESC IS ALWAYS IN ACCORDANCE WITH CITY OF MERCER ISLAND TESC REQUIREMENTS.

12. COVER ALL AREAS THAT WILL BE UN-WORKED FOR MORE THAN SEVEN DAYS DURING THE DRY SEASON (MAY 1 TO SEPT 30) OR TWO DAYS DURING THE WET SEASON (OCT 1 TO APRIL 30) WITH STRAW, WOOD FIBER MULCH, COMPOST, PLASTIC SHEETING, OR EQUIVALENT.

13. STABILIZE ALL AREAS WITHIN SEVEN DAYS OF REACHING FINAL GRADE.

14. SEED, SOD, STABILIZE, OR COVER ANY AREAS TO REMAIN UNWORKED FOR MORE THAN 30 DAYS.

15. UPON COMPLETION OF THE PROJECT, STABILIZE ALL DISTURBED AREAS AND REMOVE BMPS IF APPROPRIATE.

DENUDED AREAS REQUIREMENTS

APRIL 1 TO SEPT 30
ALL DENUDED AREAS MUST BE STABILIZED WITHIN 7 DAYS OF CONSTRUCTION. PLEASE READ ALL CITY TESC NOTES ON SHEET C1.2.

OCT 1 TO MARCH 31
ALL DENUDED AREAS MUST BE STABILIZED WITHIN 2 DAYS OF GRADING. IF AN EROSION PROBLEM ALREADY EXISTS ON THE SITE, OTHER COVER PROTECTION AND EROSION CONTROL WILL BE REQUIRED.

EROSION CONTROL NOTES

D.8.2 STANDARD ESC PLAN NOTES
THE STANDARD ESC PLAN NOTES MUST BE INCLUDED ON ALL ESC PLANS. AT THE APPLICANT'S DISCRETION, NOTES THAT IN NO WAY APPLY TO THE PROJECT MAY BE OMITTED; HOWEVER, THE REMAINING NOTES MUST NOT BE RENUMBERED. FOR EXAMPLE, IF ESC NOTE #3 WERE OMITTED, THE REMAINING NOTES SHOULD BE NUMBERED 1, 2, 4, 5, 6, ETC.

1. APPROVAL OF THIS EROSION AND SEDIMENTATION CONTROL (ESC) PLAN DOES NOT CONSTITUTE AN APPROVAL OF PERMANENT ROAD OR DRAINAGE DESIGN (E.G., SIZE AND LOCATION OF ROADS, PIPES, RESTRICTORS, CHANNELS, RETENTION FACILITIES, UTILITIES, ETC.).

2. THE IMPLEMENTATION OF THESE ESC PLANS AND THE CONSTRUCTION, MAINTENANCE, REPLACEMENT, AND
UPGRADING OF THESE ESC FACILITIES IS THE RESPONSIBILITY OF THE APPLICANT/ESC SUPERVISOR UNTIL ALL CONSTRUCTION IS APPROVED.

3. THE BOUNDARIES OF THE CLEARING LIMITS SHOWN ON THIS PLAN SHALL BE CLEARLY FLAGGED BY SURVEY TAPE OR FENCING, IF REQUIRED, PRIOR TO CONSTRUCTION (SWDM APPENDIX D). DURING THE CONSTRUCTION PERIOD, NO DISTURBANCE BEYOND THE CLEARING LIMITS SHALL BE PERMITTED. THE CLEARING LIMITS SHALL BE MAINTAINED BY THE APPLICANT/ESC SUPERVISOR FOR THE DURATION OF CONSTRUCTION.

4. STABILIZED CONSTRUCTION ENTRANCES SHALL BE INSTALLED AT THE BEGINNING OF CONSTRUCTION AND MAINTAINED FOR THE DURATION OF THE PROJECT. ADDITIONAL MEASURES, SUCH AS CONSTRUCTED WHEEL WASH SYSTEMS OR WASH PADS, MAY BE REQUIRED TO ENSURE THAT ALL PAVED AREAS ARE KEPT CLEAN AND TRACK OUT TO ROAD RIGHT OF WAY DOES NOT OCCUR FOR THE DURATION OF THE PROJECT.

5. THE ESC FACILITIES SHOWN ON THIS PLAN MUST BE CONSTRUCTED PRIOR TO OR IN CONJUNCTION WITH ALL CLEARING AND GRADING SO AS TO ENSURE THAT THE TRANSPORT OF SEDIMENT TO SURFACE WATERS, DRAINAGE SYSTEMS, AND ADJACENT PROPERTIES IS MINIMIZED.

6. THE ESC FACILITIES SHOWN ON THIS PLAN ARE THE MINIMUM REQUIREMENTS FOR ANTICIPATED SITE CONDITIONS. DURING THE CONSTRUCTION PERIOD, THESE ESC FACILITIES SHALL BE UPGRADED AS NEEDED FOR UNEXPECTED STORM EVENTS AND MODIFIED TO ACCOUNT FOR CHANGING SITE CONDITIONS (E.G. ADDITIONAL COVER MEASURES, ADDITIONAL SUMP PUMPS, RELOCATION OF DITCHES AND SILT FENCES, PERIMETER PROTECTION ETC.) AS DIRECTED BY CITY OF MERCER ISLAND.

7. THE ESC FACILITIES SHALL BE INSPECTED DAILY BY THE APPLICANT/ESC SUPERVISOR AND MAINTAINED TO ENSURE CONTINUED PROPER FUNCTIONING. WRITTEN RECORDS SHALL BE KEPT OF WEEKLY REVIEWS OF THE ESC FACILITIES.

8. ANY AREAS OF EXPOSED SOILS, INCLUDING ROADWAY EMBANKMENTS, THAT WILL NOT BE DISTURBED FOR TWO CONSECUTIVE DAYS DURING THE WET SEASON OR SEVEN DAYS DURING THE DRY SEASON SHALL BE IMMEDIATELY STABILIZED WITH THE APPROVED ESC METHODS (E.G., SEEDING, MULCHING, PLASTIC COVERING, ETC.).

9. ANY AREA NEEDING ESC MEASURES THAT DO NOT REQUIRE IMMEDIATE ATTENTION SHALL BE ADDRESSED WITHIN SEVEN (7) DAYS.

10. THE ESC FACILITIES ON INACTIVE SITES SHALL BE INSPECTED AND MAINTAINED A MINIMUM OF ONCE A MONTH DURING THE DRY SEASON, BI-MONTHLY DURING THE WET SEASON, OR WITHIN TWENTY FOUR (24) HOURS FOLLOWING A STORM EVENT.

11. AT NO TIME SHALL MORE THAN ONE (1) FOOT OF SEDIMENT BE ALLOWED TO ACCUMULATE WITHIN A CATCH BASIN. ALL CATCH BASINS AND CONVEYANCE LINES SHALL BE CLEANED PRIOR TO PAVING. THE CLEANING OPERATION SHALL NOT FLUSH SEDIMENT-LADEN WATER INTO THE DOWNSTREAM SYSTEM.

12. ANY PERMANENT RETENTION/DETENTION FACILITY USED AS A TEMPORARY SETTLING BASIN SHALL BE MODIFIED WITH THE NECESSARY EROSION CONTROL MEASURES AND SHALL PROVIDE ADEQUATE STORAGE CAPACITY. IF THE FACILITY IS TO FUNCTION ULTIMATELY AS AN INFILTRATION SYSTEM, THE TEMPORARY FACILITY MUST BE ROUGH GRADED SO THAT THE BOTTOM AND SIDES ARE AT LEAST THREE FEET ABOVE THE FINAL GRADE OF THE PERMANENT FACILITY.

13. COVER MEASURES WILL BE APPLIED IN CONFORMANCE WITH APPENDIX D OF THE SURFACE WATER DESIGN MANUAL

14. PRIOR TO THE BEGINNING OF THE WET SEASON (OCT. 1), ALL DISTURBED AREAS SHALL BE REVIEWED TO IDENTIFY WHICH ONES CAN BE SEEDED IN PREPARATION FOR THE WINTER RAINS. DISTURBED AREAS SHALL BE SEEDED WITHIN ONE WEEK OF THE BEGINNING OF THE WET SEASON.

CITY NOTES

1. ANY CHANGES TO THE APPROVED PLANS REQUIRES CITY APPROVAL THROUGH A REVISION.

2. APPLICANT IS RESPONSIBLE FOR ANY DAMAGES TO UNDERGROUND UTILITIES CAUSED FROM THIS CONSTRUCTION.

3. CATCH BASIN FILTERS SHOULD BE PROVIDED FOR ALL STORM DRAIN CATCH BASINS/INLETS DOWNSLOPE AND WITHIN 500 FEET OF THE CONSTRUCTION AREA. CATCH BASIN FILTERS SHOULD BE DESIGNED BY THE MANUFACTURER FOR USE AT CONSTRUCTION SITES AND APPROVED BY THE CITY INSPECTOR. CATCH BASIN FILTERS SHOULD BE INSPECTED FREQUENTLY, ESPECIALLY AFTER STORM EVENTS. IF THE FILTER BECOMES CLOGGED, IT SHOULD BE CLEANED OR REPLACED.

4. CONTRACTORS SHALL VERIFY LOCATIONS AND DEPTHS OF UTILITES.

5. AT LEAST 48 HOURS PRIOR TO CONSTRUCTION, CALL "ONE CALL" AT 1.800.424.5555

6. DO NOT BACKFILL WITH NATIVE MATERIAL ON PUBLIC RIGHT-OF-WAY. ALL MATERIAL MUST BE IMPORTED

7. EROSION CONTROL: ALL "LAND DISTURBING ACTIVITY" IS SUBJECT TO PROVISIONS OF MERCER ISLAND ORDINANCE 95C-118 "STORM WATER MANAGEMENT." SPECIFIC ITEMS TO BE FOLLOWED AT YOUR SITE:

8. PROTECT ADJACENT PROPERTIES FROM ANY INCREASED RUNOFF OR SEDIMENTATION DUE TO THE CONSTRUCTION PROJECT THROUGH THE USE OF APPROPRIATE "BEST MANAGEMENT PRACTICES" (BMP) EXAMPLES INCLUDE, BUT ARE NOT LIMITED TO, SEDIMENT TRAPS, SEDIMENT PONDS, FILTER FABRIC FENCES, VEGETATIVE BUFFER STRIPS OR BIOENGINEERED SWALES.

9. CONSTRUCTION ACCESS TO THE SITE SHOULD BE LIMITED TO ONE ROUTE. STABILIZE ENTRANCE WITH QUARRY SPALLS TO PREVENT SEDIMENT FROM LEAVING THE SITE OR ENTERING THE STORM DRAINS.

10. PREVENT SEDIMENT, CONSTRUCTION DEBRIS, PAINTS, SOLVENTS, ETC., OR OTHER TYPES OF POLLUTION FROM ENTERING PUBLIC STORM DRAINS. KEEP ALL POLLUTION ON YOUR SITE.

11. ALL EXPOSED SOILS SHALL REMAIN DENUDED FOR NO LONGER THAN SEVEN (7) DAYS AND SHALL BE STABILIZED WITH MULCH, HAY, OR THE APPROPRIATE GROUND COVER. ALL EXPOSED SOILS SHALL BE COVERED IMMEDIATELY DURING ANY RAIN EVENT.

12. INSTALLATION OF CONCRETE DRIVEWAYS, TREES, SHRUBS, IRRIGATION, BOULDERS, BERMS, WALLS, GATES, AND OTHER IMPROVEMENTS ARE NOT ALLOWED IN THE PUBLIC RIGHT-OF-WAY WITHOUT PRIOR APPROVAL, AND AN ENCROACHMENT AGREEMENT AND RIGHT OF WAY PERMIT FROM THE SENIOR DEVELOPMENT ENGINEER.

13. OWNER SHALL CONTROL DISCHARGE OF SURFACE DRAINAGE RUNOFF FROM EXISTING AND NEW IMPERVIOUS AREAS IN A RESPONSIBLE MANNER. CONSTRUCTION OF NEW GUTTERS AND DOWNSPOUTS, DRY WELLS, LEVEL SPREADERS OR DOWNSTREAM CONVEYANCE PIPE MAY BE NECESSARY TO MINIMIZE DRAINAGE IMPACT TO YOUR NEIGHBORS. CONSTRUCTION OF MINIMUM DRAINAGE IMPROVEMENTS SHOWN OR CALLED OUT ON THIS PLAN DOES NOT IMPLY RELIEF FROM CIVIL LIABILITY FOR YOUR DOWNSTREAM DRAINAGE.

14. POT HOLING THE PUBLIC UTILITIES IS REQUIRED PRIOR TO ANY GRADING ACTIVITIES LESS THAN 6" OVER THE PUBLIC MAINS (WATER, SEWER AND STORM SYSTEMS). IF THERE IS A CONFLICT, THE APPLICANT IS REQUIRED TO SUBMIT A REVISION FOR APPROVAL PRIOR TO ANY GRADING ACTIVITIES OVER THE PUBLIC MAINS.

15. REMEMBER: EROSION CONTROL IS YOUR FIRST INSPECTION.

16. ROOF DRAINS MUST BE CONNECTED TO THE STORM DRAIN SYSTEM AND INSPECTED BY THE PUBLIC WORKS DEPARTMENT PRIOR TO ANY BACKFILLING OF PIPE.

17. SILENT FENCE: CLEAN AND PROVIDE REGULAR MAINTENANCE OF THE SILT FENCE. THE FENCE IS TO REMAIN VERTICAL AND IS TO FUNCTION PROPERLY THROUGHOUT THE TERM OF THE PROJECT.

18. WORK IN PUBLIC RIGHT OF WAY REQUIRES A RIGHT-OF-WAY USE PERMIT.

19. REFER TO WATER SERVICE PERMIT FOR ACTUAL LOCATION OF NEW WATER METER AND SERVICE LINE DETERMINED BY MERCER ISLAND WATER DEPARTMENT.

16. THE TV INSPECTION OF THE EXISTING SIDE SEWER TO THE CITY SEWER MAIN IS REQUIRED. IF THE RESULT OF THE TV INSPECTION IS NOT IN SATISFACTORY CONDITION, AS DETERMINED BY THE CITY OF MERCER ISLAND INSPECTOR, THE REPLACEMENT OF THE EXISTING SIDE SEWER IS REQUIRED. ALTERNATELY, A PRESSURE TEST OF THE SIDE SEWER, FROM SEWER MAIN TO POINT OF CONNECTION, MAY BE SUBSTITUTED FOR THE VIDEO INSPECTION.

20. NEWLY INSTALLED SIDE SEWER REQUIRES A 4 P.S.I. AIR TEST OR PROVIDE 10' OF HYDROSTATIC HEAD TEST.

21. POT HOLING THE PUBLIC UTILITIES IS REQUIRED PRIOR TO ANY GRADING ACTIVITIES LESS THAN 6" OVER THE PUBLIC MAINS (WATER, SEWER AND STORM SYSTEMS). IF THERE IS A CONFLICT, THE APPLICANT IS REQUIRED TO SUBMIT A REVISION FOR APPROVAL PRIOR TO ANY GRADING ACTIVITIES OVER THE PUBLIC MAINS.

22. THE LIMITS AND EXTENDS OF THE PAVEMENT IN THE PUBLIC RIGHT OF WAY SHALL BE DETERMINED BY THE CITY ENGINEER PRIOR TO FINALIZE THE PROJECT.

NO.	DATE	BY	REVISIONS

APPLICANT
DAVID AND KAREN ZIMMER

DATE: Jun 09, 2025
JOB# 2033
DRAFTED: SS DESIGN: DE
DIGITAL SIGNATURE

Jun 09 2025
JEFFREY E. DUFFY
STATE OF WASHINGTON
38794
REGISTERED
PROFESSIONAL ENGINEER

CIVIL ENGINEERING SOLUTIONS
701 N. 36th STREET, SUITE 450 SEATTLE, WA 98103
PHONE: 206.930.0342 DUFFY@CESOLUTIONS.US

TESC & CITY NOTES
TESC DETAILS

ZIMMER RESIDENCE
4661 FOREST AVENUE SE, MERCER ISLAND, WA 98040

DRAWING NO:
C1.2

APN 404500-0065

SANITARY SEWER IMPROVEMENTS

1 -

2 -6" SDR 35 PVC SANITARY SEWER(SS) @ MIN 1.0 %.

3 -BACKFLOW VALVE

4 -6" SEWER CLEANOUT PER MERCER ISLAND DETAIL S-19.

7 -LOCATE AND VIDEO CONDITION OF EXISTING SANITARY SIDE SEWER. REPLACE LINE IF FOUND DEFECTIVE AS DETERMINED BY CITY INSPECTOR.

WATER IMPROVEMENTS

10 -NEW SF RESIDENTIAL WATER SERVICE & METER PIT. CONFIRM REQUIRED SIZE WITH BUILDING PERMIT REVIEW. INSTALL PER MERCER ISLAND DETAIL W-13, W-14, OR W-14A DEPENDING ON SIZE REQUIREMENT.

11 -PRIVATE HDPE WATER FROM METER TO HOUSE. SEE PLAN FOR SIZE. CONFIRM ADEQUATE TO MEET FIRE FLOW REQUIREMENTS. HDPE WATER (ASTM D2239). RECOMMENDED DEPTH=36". COORDINATE HOUSE ENTRY WITH BUILDER/OWNER.

12 -REDUCED PRESSURE BACKFLOW ASSEMBLY (RPBA) REQUIRED. PROVIDE FROST PROTECTION IN ACCORDANCE WITH UPC (UNIFORM PLUMBING CODE).

14 - ABANDONED EX WATER METER & CAP AT MAIN. NEW WATER SERVICE LINE, NEW WATER METER, AND NEW WATER SUPPLY LINE ARE REQUIRED. THE LOCATION OF THE NEW WATER METER WILL BE DETERMINED BY THE CITY PUBLIC WORKS.

STORM DRAIN

20 -4" STORM DRAIN (3034 PVC) @ MIN 2 ⅝ GRADE

21 -4" FOUNDATION DRAIN (3034 PVC) @ MIN 1 ⅝ GRADE

22 -6" STORM DRAIN (3034 PVC) @ MIN 2 ⅝ GRADE

23 -

24 -12" STORM DRAIN (HDPE N12 OR EQUAL)

25 -

26 -

28 -TRENCH EXCAVATION FOR SUBJECT STORM PIPE SHALL REMAIN CONTAINED WITHIN PROPERTY LINE UNLESS A WRITTEN CONSTRUCTION EASEMENT IS PROVIDED BY ADJACENT OWNER

29 -

STORM DRAIN STRUCTURES

30 -TYPE 1 CB WITH STANDARD GRATE, MAX 5' RIM TO FL DEPTH. PROVIDE RISOR WITH TURNED-DOWN ELBOW FOR IMPROVED WATER QUALITY FUNCTION.

31 -

32 -TYPE 1 CB WITH SOLID LID

33 -TYPE 1 CB (OR EQUAL), OIL/WATER SPILL CONTROL STYLE. USE DECORATIVE GRATE IF AVAILABLE

34 -

35 -18" YARD DRAIN (OR EQUAL) WITH SOLID LID

36 -8" WIDE NDS DURASLOPE CHANNEL DRAIN KIT OR EQUAL. CLASS B VEHICLE RATED GRATE.

39 -

40 -

41 -

45 -

46 -

47 -

48 -

STORM BMP's

50 -COMPOST AMENDED SOIL TO ALL DISTURBED AREAS (SEE DETAIL SHEET C3.5). TILL 2-3" OF COMPOST INTO UPPER 8" OF SOIL. LOOSEN COMPACTED SUBSOIL, IF NEEDED BY RIPPING TO 12" DEPTH. MULCH LANDSCAPE BEDS AFTER PLANTING.

51 -

52 -

53 -

54 -

55 -

56 -

57 -

58 -

NO BMPS PROPOSED

MISC KEY NOTES

60 -MIN 4" PRIVATE CONCRETE CURB RECOMMENDED

76 -SOLDIER PILE DEBRIS WALL. REQUIRED BY GEOTECHNICAL. SEE DESIGN BY PANGEO.

100 -SOLDIER PILE WALL WITH FOOTING DRAIN ON LOW SIDE AS SHOWN. WEEP HOLES MIN 6' OC.

SOILS

"INFILTRATION LID FACILITIES ARE NOT PERMITTED"
LAKEFRONT PROPERTY
INFILTRATION NOT PROPOSED

SURVEYOR

TOPOGRAPHIC SURVEY BY:
BUSH, ROED & HITCHINGS, INC.
2009 MINOR AVE. EAST
SEATTLE, WA 98102
PHONE (206) 323-4144
www.brhinc.com

VERTICAL DATUM

NAVD 88
SEE SURVEY

LEGAL DESCRIPTION

SEE C1.0

SOIL AMENDMENT REQUIRED

COMPOST AMENDED SOIL REQUIRED ON ALL LANDSCAPED AREAS AFTER CONSTRUCTION. SEE DETAIL ON C3.5.

SOIL CERTIFICATION REQUIRED

A POST CONSTRUCTION INSPECTION & CERTIFICATION OF AMENDED SOILS IS REQUIRED BY A LICENSED CIVIL ENGINEER.
THIS IS REQUIRED BEFORE FINAL SIGN-OFF BY CITY.

MINIMUM 10% ORGANIC - COMPOST & MULCH SOIL REQUIRED

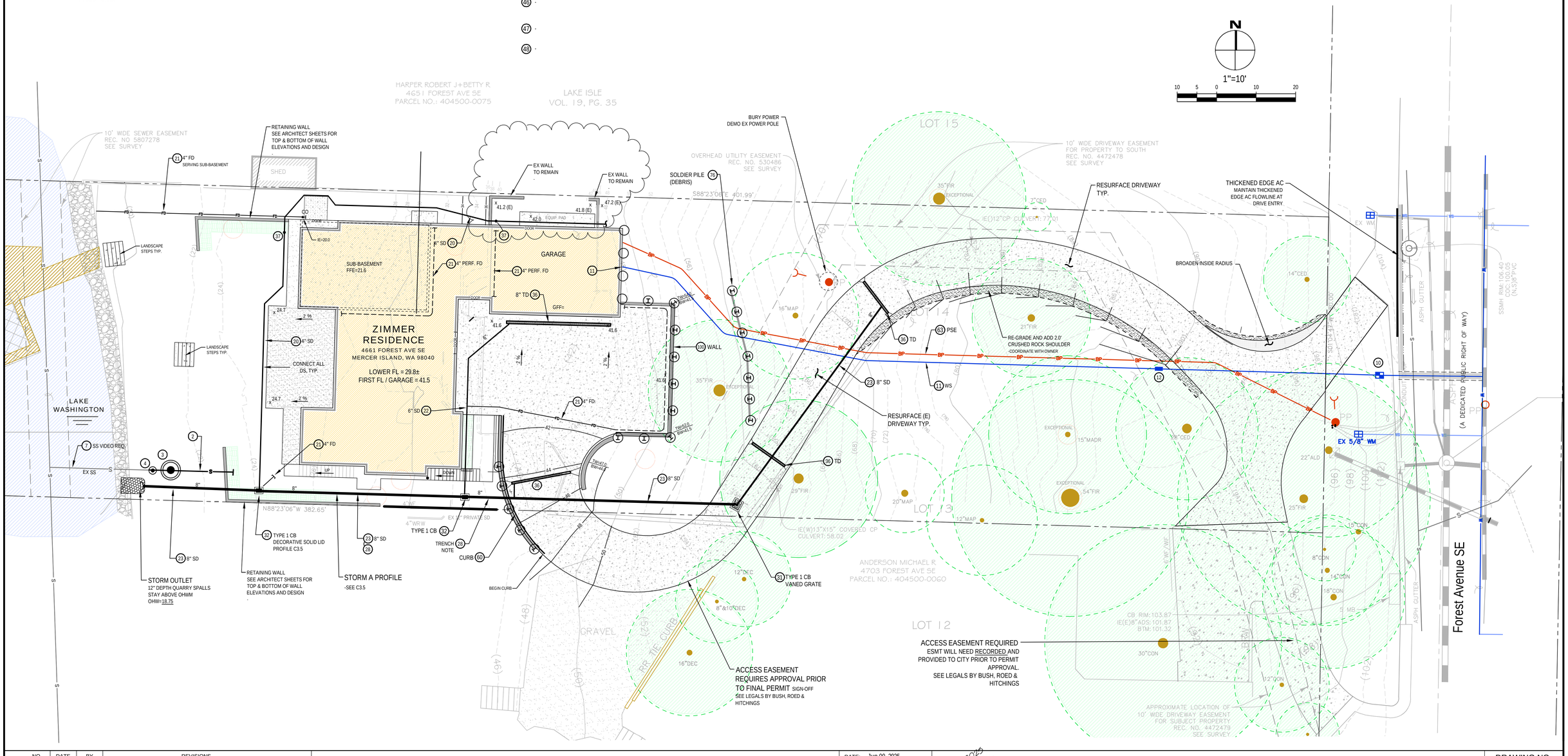

NO.	DATE	BY	REVISIONS

APPLICANT
DAVID AND KAREN ZIMMER

DATE: Jun 09, 2025
JOB# 2033
DRAFTED: DE DESIGN: DE
DIGITAL SIGNATURE

Jun 09 2025
JEFFREY E. DUFFY
STATE OF WASHINGTON
38798
REGISTERED PROFESSIONAL ENGINEER

CIVIL ENGINEERING SOLUTIONS
701 N. 36th STREET, SUITE 450 SEATTLE, WA 98103
PHONE: 206.930.0342 DUFFY@CESOLUTIONS.US

DRAINAGE / CIVIL PLAN

ZIMMER RESIDENCE
4661 FOREST AVENUE SE, MERCER ISLAND, WA 98040

DRAWING NO:
C2.0

APN 404500-0065

LAKE CONNECTION CLEANOUT

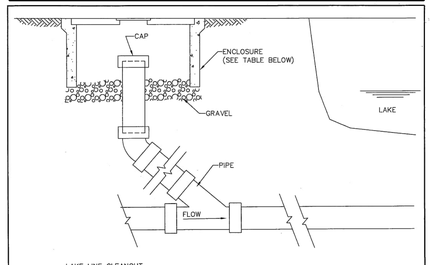

LAKE LINE CLEANOUT

PIPE SIZE	MATERIAL	CAP	ENCLOSURE	COMMENTS
6"	PVC	SIDU MECHANICAL SEWER PLUG	CONC. METER BOX, FOGTITE 1-D	INSTALLATION BELOW HYDRAULIC GRADIENT
6"	PVC	PVC CAP W/O GASKET	CONC. METER BOX, FOGTITE 1-D	INSTALLATION ABOVE HYDRAULIC GRADIENT
6"	DIP	MECHANICAL JOINT CAP	CONC. METER BOX, FOGTITE 1-D	INSTALLATION ABOVE HYDRAULIC GRADIENT
8"	PVC	PVC CAP W/O GASKET	CONC. METER BOX, FOGTITE NO. 2 (CONC. LID W/ ALUM. INS. PLATE)	INSTALLATION ABOVE HYDRAULIC GRADIENT
8"	DIP	MECHANICAL JOINT CAP	CONC. METER BOX, FOGTITE NO. 2 (CONC. LID W/ ALUM. INS. PLATE)	INSTALLATION ABOVE HYDRAULIC GRADIENT

NOTES

1. IF POSSIBLE, CLEANOUT TO BE LOCATED JUST ABOVE HYDRAULIC GRADIENT OF LAKE LINE. CLEANOUT SHOULD ALSO BE LOCATED TO PROVIDE EASY ACCESS FOR INSPECTION AND MAINTENANCE BY THE HOME OWNER.
2. SEE S-23 & S-24 FOR BACK WATER VALVE LOCATION.

CITY OF MERCER ISLAND
STANDARD DETAILS
SEWER
SIDE SEWER CLEANOUT FOR LAKE LINE CONNECTIONS
6-5-2009 | NO SCALE | **S-25**

REV DATE | APPROVED

BACKWATER VALVE & MH

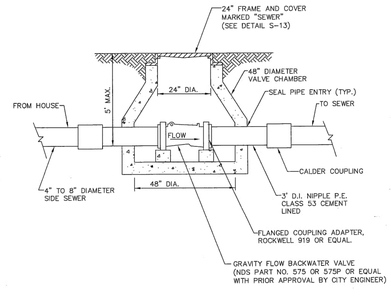

CITY OF MERCER ISLAND
STANDARD DETAILS
SEWER
BACK WATER VALVE ASSEMBLY FOR JOINT USE SIDE SEWER (4" OR 6" DIAMETER)
6-5-2009 | NO SCALE | **S-26**

REV DATE | APPROVED

NO.	DATE	BY	REVISIONS

APPLICANT
DAVID AND KAREN ZIMMER

DATE: Apr 09, 2025
JOB# 2033
DRAFTED: DE DESIGN: DE
DIGITAL SIGNATURE

Apr 09, 2025
JEFFREY E. ALLEN
STATE OF WASHINGTON
38766
REGISTERED PROFESSIONAL ENGINEER

CIVIL ENGINEERING SOLUTIONS
701 N. 36th STREET, SUITE 450
PHONE: 206.930.0342
SEATTLE, WA 98103
DUFFY@CESOLUTIONS.US

SEWER NOTES & DETAILS

ZIMMER RESIDENCE
4661 FOREST AVENUE SE, MERCER ISLAND, WA 98040

DRAWING NO:
C3.2
APN 404500-0065

PRIVATE STORM "A" PROFILE

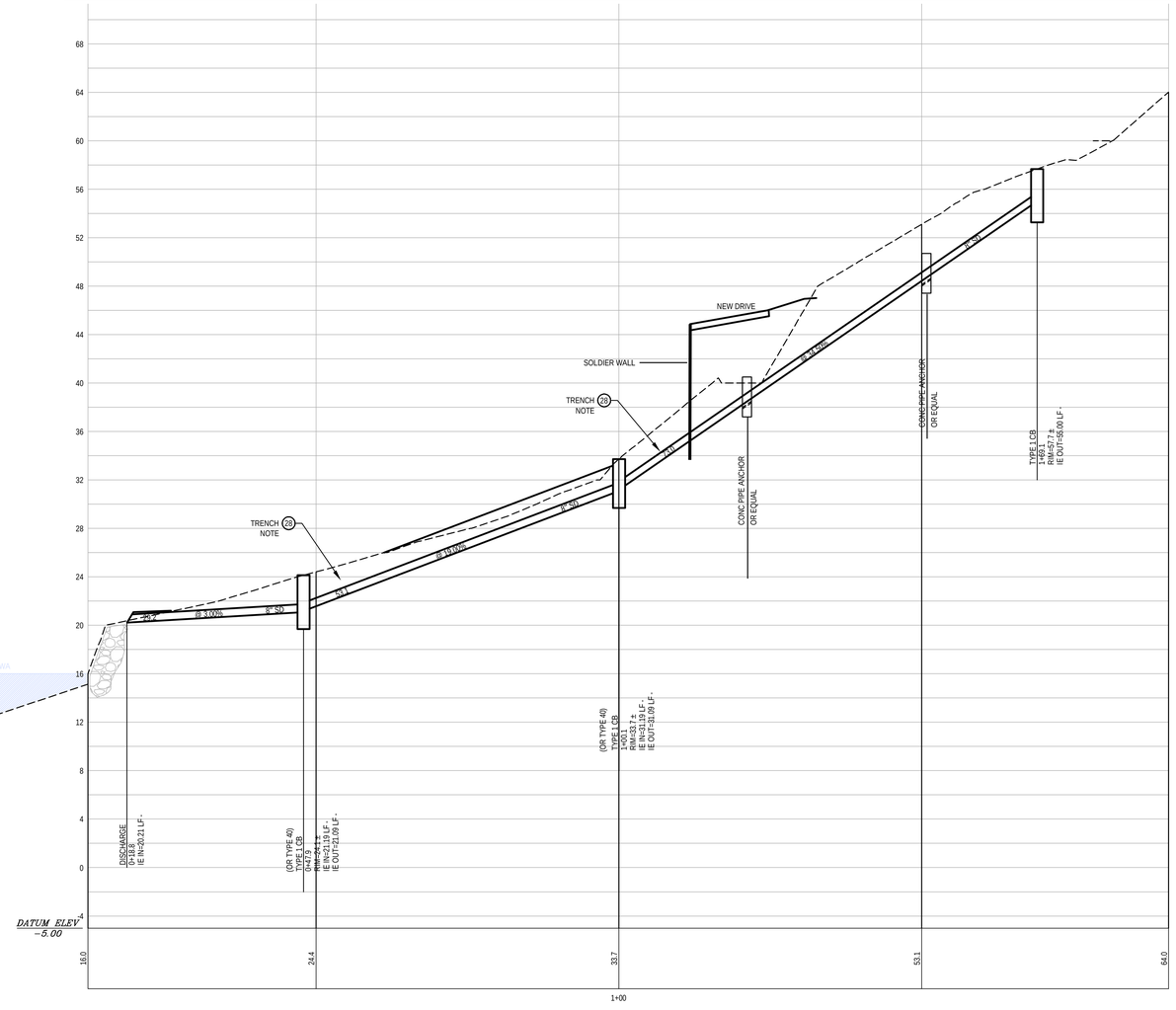

MINIMUM 10% ORGANIC - COMPOST SOIL REQUIRED

SOIL AMENDMENT REQUIRED

COMPOST AMENDED SOIL REQUIRED ON ALL LANDSCAPED AREAS AFTER CONSTRUCTION.
SEE DETAIL BELOW.

SOIL INSPECTION REQUIRED BY ENGINEER

A POST CONSTRUCTION INSPECTION & CERTIFICATION OF AMENDED SOILS IS REQUIRED
BY A LICENSED CIVIL ENGINEER.
THIS IS REQUIRED BEFORE FINAL SIGN-OFF BY CITY.

COMPOST AMENDED SOIL SPEC

AMENDMENT FOR LANDSCAPED AREAS

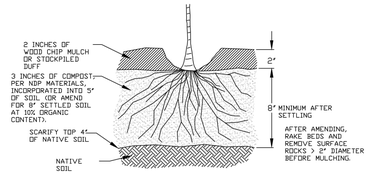

SOIL AMENDMENT FOR GRASS OR TURF AREAS

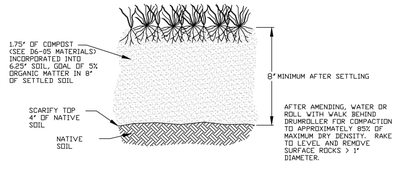

NOTES:

1. AMEND SOILS PER DOE MANUAL, VOL. V, S.31, BMP T5.13, (2012 OR CURRENT) OR WWW.SOILSFORSALMON.ORG.
2. DO NOT AMEND SOILS IN AREAS WITH UNDISTURBED SOIL AND NATIVE VEGETATION.
3. OPTIONAL ALTERNATIVE: STOCKPILE NATIVE TOPSOIL ONSITE, AMEND IF NEEDED, AND REPLACE BEFORE PLANTING.
4. OPTIONAL ALTERNATIVE: IMPORT TOPSOIL MIX OF SUFFICIENT ORGANIC CONTENT AND DEPTH TO MEET REQUIREMENTS.

JANUARY 2024 NO SCALE

City of Bellevue — STORM AND SURFACE WATER UTILITY

TITLE: AMENDED SOILS

NO. ~~NSD-1~~

NO.	DATE	BY	REVISIONS

APPLICANT
DAVID AND KAREN ZIMMER

DATE: May 08, 2025
JOB#: 2033
DRAFTED: SS DESIGN: SS
DIGITAL SIGNATURE

May 08 2025
DUFFY E. SCHMIDT
STATE OF WASHINGTON
52788
REGISTERED PROFESSIONAL ENGINEER

CIVIL ENGINEERING SOLUTIONS
701 N. 36th STREET, SUITE 450 SEATTLE, WA 98103
PHONE: 206.930.0342 DUFFY@CESOLUTIONS.US

PRIVATE STORM A PROFILE
STORMWATER BMP DETAILS

ZIMMER RESIDENCE
4661 FOREST AVENUE SE, MERCER ISLAND, WA 98040

DRAWING NO: C3.5

APN 404500-0065

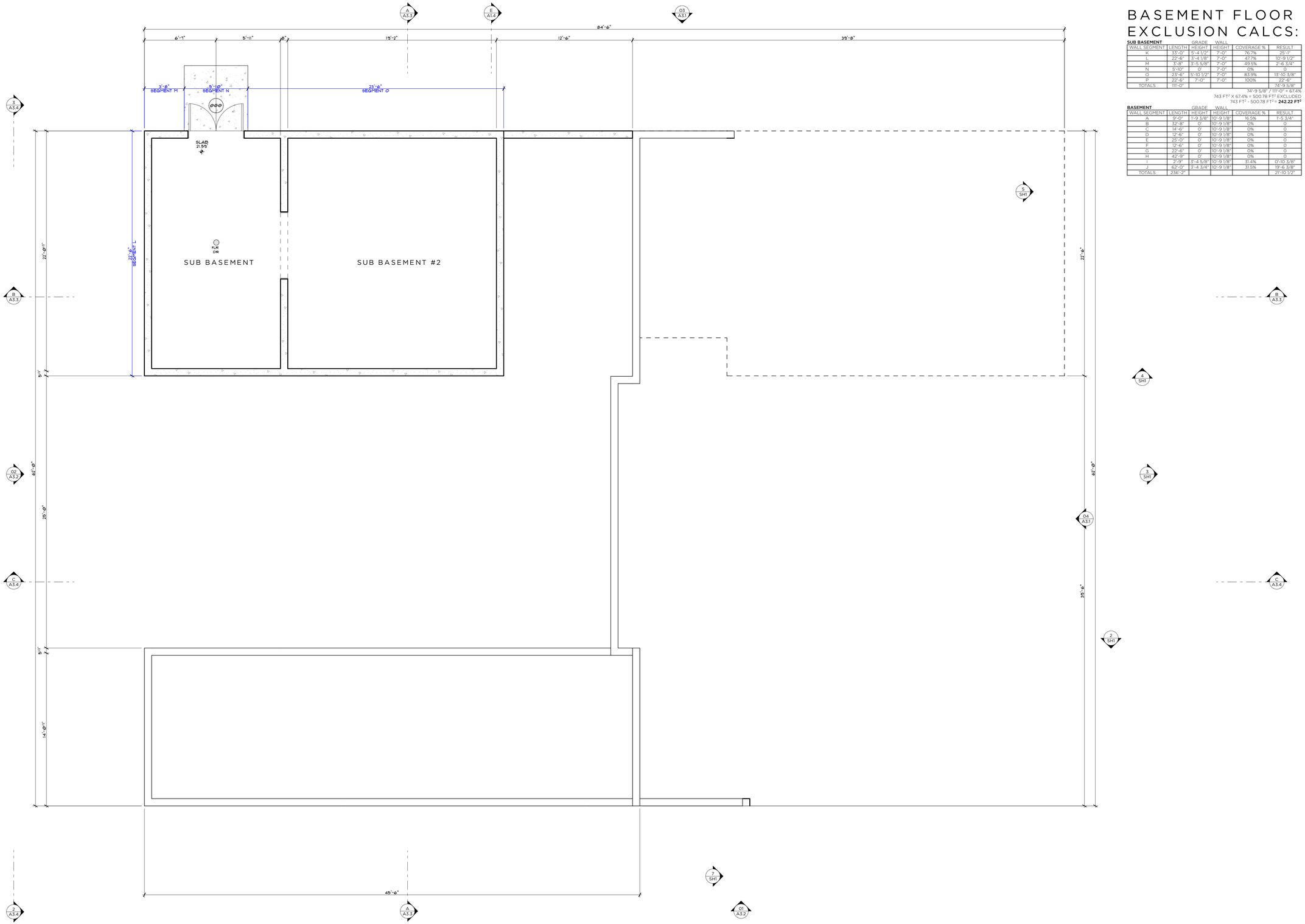

TOTAL GROSS FLOOR AREA: (18.3%) 5,767.98 FT²

BASEMENT FLOOR EXCLUSION CALCS:

SUB BASEMENT

WALL SEGMENT	LENGTH	GRADE HEIGHT	WALL HEIGHT	COVERAGE %	RESULT
K	33'-0"	5'-4 1/2"	7'-0"	76.7%	25'-1"
L	22'-6"	3'-4 1/8"	7'-0"	47.7%	10'-9 1/2"
M	3'-8"	3'-5 5/8"	7'-0"	49.5%	2'-6 3/4"
N	5'-10"	0'	7'-0"	0%	0
O	23'-6"	5'-10 1/2"	7'-0"	83.9%	13'-10 3/8"
P	22'-6"	7'-0"	7'-0"	100%	22'-6"
TOTALS	111'-0"				74'-9 5/8"

74'-9 5/8" / 111'-0" = 67.4%

743 FT² X 67.4% = 500.78 FT² EXCLUDED

743 FT² - 500.78 FT² = **242.22 FT²**

BASEMENT

WALL SEGMENT	LENGTH	GRADE HEIGHT	WALL HEIGHT	COVERAGE %	RESULT
A	9'-0"	1'-9 3/8"	10'-9 1/8"	16.5%	1'-5 3/4"
B	32'-8"	0'	10'-9 1/8"	0%	0
C	14'-6"	0'	10'-9 1/8"	0%	0
D	12'-6"	0'	10'-9 1/8"	0%	0
E	25'-0"	0'	10'-9 1/8"	0%	0
F	12'-6"	0'	10'-9 1/8"	0%	0
G	22'-6"	0'	10'-9 1/8"	0%	0
H	42'-9"	0'	10'-9 1/8"	0%	0
I	2'-9"	3'-4 5/8"	10'-9 1/8"	31.4%	0'-10 3/8"
J	62'-0"	3'-4 3/4"	10'-9 1/8"	31.5%	19'-6 3/8"
TOTALS	236'-2"				21'-10 1/2"

RIPPLE
DESIGN STUDIO
206.913.2333
4303 STONE WAY N
SEATTLE, WA 98103

9790
REGISTERED ARCHITECT
JAMES M DEARTH
STATE OF WASHINGTON

ZIMMER RESIDENCE
4661 FOREST AVE SE
MERCER ISLAND, WA
98040

SUB-BASEMENT FLOOR PLAN

THIS DRAWING, AS AN INSTRUMENT OF SERVICE, IS + SHALL REMAIN THE SOLE PROPERTY OF RIPPLE DESIGN STUDIO + SHALL NOT BE REPRODUCED, PUBLISHED, OR USED IN ANY MANNER WITHOUT PROPER AUTHORIZATION.
COPYRIGHT © 2017 BY RIPPLE DESIGN STUDIO

RELEASE
7 APRIL 2025

PERMIT CORRECTIONS
9 MAY 2025

PERMIT CORRECTIONS
10 JUNE 2025

PERMIT CORRECTIONS
17 JULY 2025

SUB-BASEMENT FLOOR PLAN

SCALE: 1/4" = 1'-0"

N

A2.00

ZIMMER

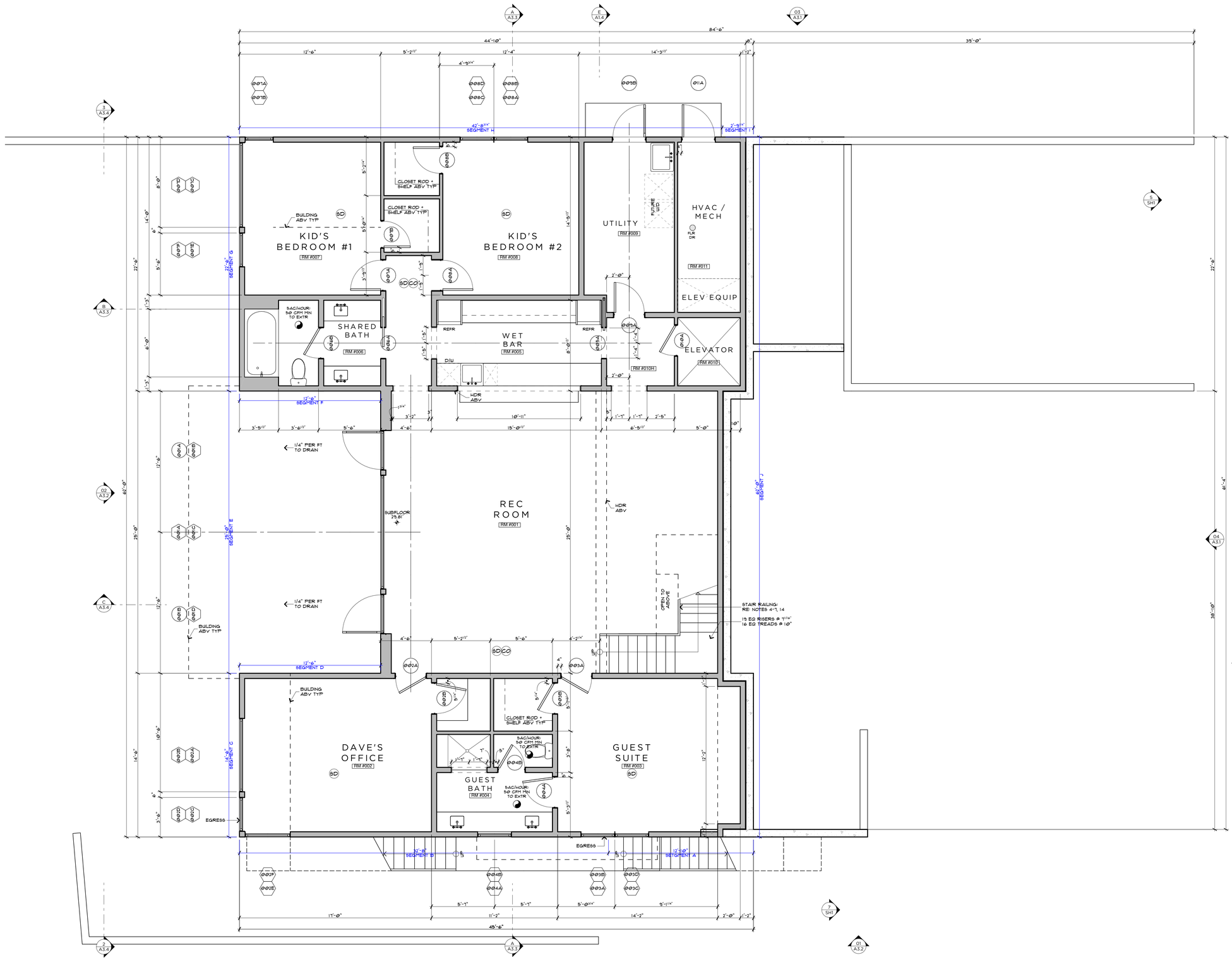

LOWER LEVEL PLAN

SCALE: 1/4" = 1'-0"

TOTAL GROSS FLOOR AREA: (18.3%) 5,767.98 FT²

BASEMENT FLOOR EXCLUSION CALCS:

SUB BASEMENT

WALL SEGMENT	LENGTH	GRADE HEIGHT	WALL HEIGHT	COVERAGE %	RESULT
K	33'-0"	5'-4 1/2"	7'-0"	76.7%	25'-1"
L	22'-6"	3'-4 1/8"	7'-0"	47.7%	10'-9 1/2"
M	3'-8"	3'-5 5/8"	7'-0"	49.5%	2'-6 3/4"
N	5'-10"	0"	7'-0"	0%	0
O	23'-6"	5'-10 1/2"	7'-0"	83.9%	13'-10 3/8"
P	22'-6"	7'-0"	7'-0"	100%	22'-6"
TOTALS	111'-0"				74'-9 5/8"

74'-9 5/8" / 111'-0" = 67.4%
743 FT² X 67.4% = 500.78 FT² EXCLUDED
743 FT² - 500.78 FT² = **242.22 FT²**

BASEMENT

WALL SEGMENT	LENGTH	GRADE HEIGHT	WALL HEIGHT	COVERAGE %	RESULT
A	9'-0"	1'-9 5/8"	10'-9 1/8"	16.5%	1'-5 3/4"
B	32'-8"	0"	10'-9 1/8"	0%	0
C	14'-6"	0"	10'-9 1/8"	0%	0
D	12'-6"	0"	10'-9 1/8"	0%	0
E	25'-0"	0"	10'-9 1/8"	0%	0
F	12'-6"	0"	10'-9 1/8"	0%	0
G	22'-6"	0"	10'-9 1/8"	0%	0
H	42'-9"	0"	10'-9 1/8"	0%	0
I	2'-9"	3'-4 5/8"	10'-9 1/8"	31.4%	0'-10 3/8"
J	62'-0"	3'-4 3/4"	10'-9 1/8"	31.5%	19'-6 3/8"
TOTALS	236'-2"				21'-10 1/2"

RIPPLE
DESIGN STUDIO
206.913.2333
4303 STONE WAY N
SEATTLE, WA 98103

9790
REGISTERED ARCHITECT
JAMES M DEARTH
STATE OF WASHINGTON

ZIMMER RESIDENCE
4661 FOREST AVE SE
MERCER ISLAND, WA
98040

BASEMENT FLOOR PLAN

THIS DRAWING, AS AN INSTRUMENT OF SERVICE, IS + SHALL REMAIN THE SOLE PROPERTY OF RIPPLE DESIGN STUDIO + SHALL NOT BE REPRODUCED, PUBLISHED, OR USED IN ANY MANNER WITHOUT PROPER AUTHORIZATION.
COPYRIGHT © 2017 BY RIPPLE DESIGN STUDIO

RELEASE
7 APRIL 2025

PERMIT CORRECTIONS
9 MAY 2025

PERMIT CORRECTIONS
10 JUNE 2025

PERMIT CORRECTIONS
17 JULY 2025

N

A2.0

ZIMMER

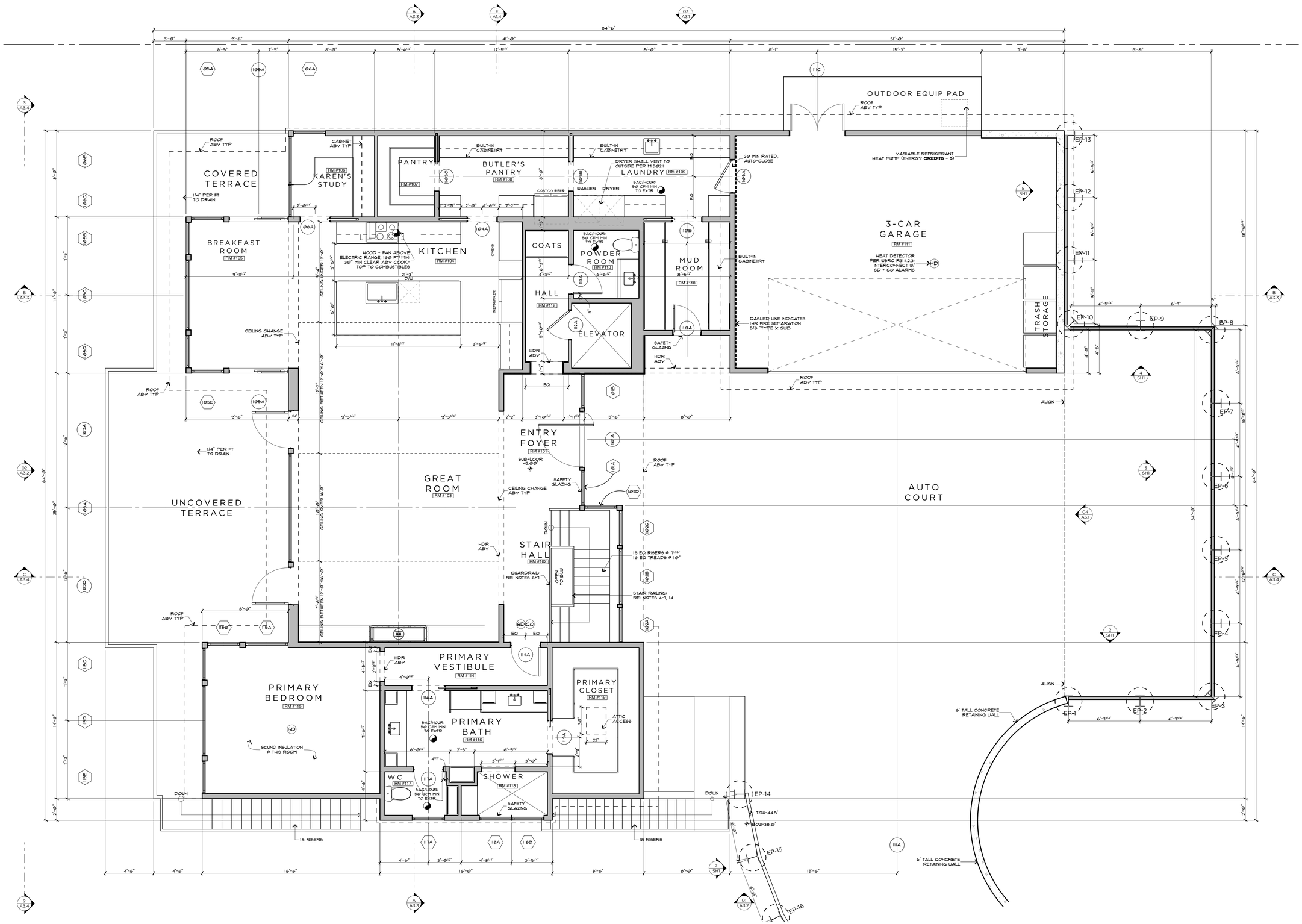

MAIN FLOOR PLAN

SCALE: 1/4" = 1'-0"

RIPPLE
DESIGN STUDIO
206.913.2333
4303 STONE WAY N
SEATTLE, WA 98103

9790 REGISTERED ARCHITECT
JAMES M DEARTH
STATE OF WASHINGTON

ZIMMER RESIDENCE
4661 FOREST AVE SE
MERCER ISLAND, WA
98040

MAIN FLOOR PLAN

THIS DRAWING, AS AN INSTRUMENT OF SERVICE, IS + SHALL REMAIN THE SOLE PROPERTY OF RIPPLE DESIGN STUDIO + SHALL NOT BE REPRODUCED, PUBLISHED, OR USED IN ANY MANNER WITHOUT PROPER AUTHORIZATION. COPYRIGHT © 2017 BY RIPPLE DESIGN STUDIO

RELEASE
7 APRIL 2025

PERMIT CORRECTIONS
9 MAY 2025

PERMIT CORRECTIONS
10 JUNE 2025

PERMIT CORRECTIONS
17 JULY 2025

N

A2.1

ZIMMER

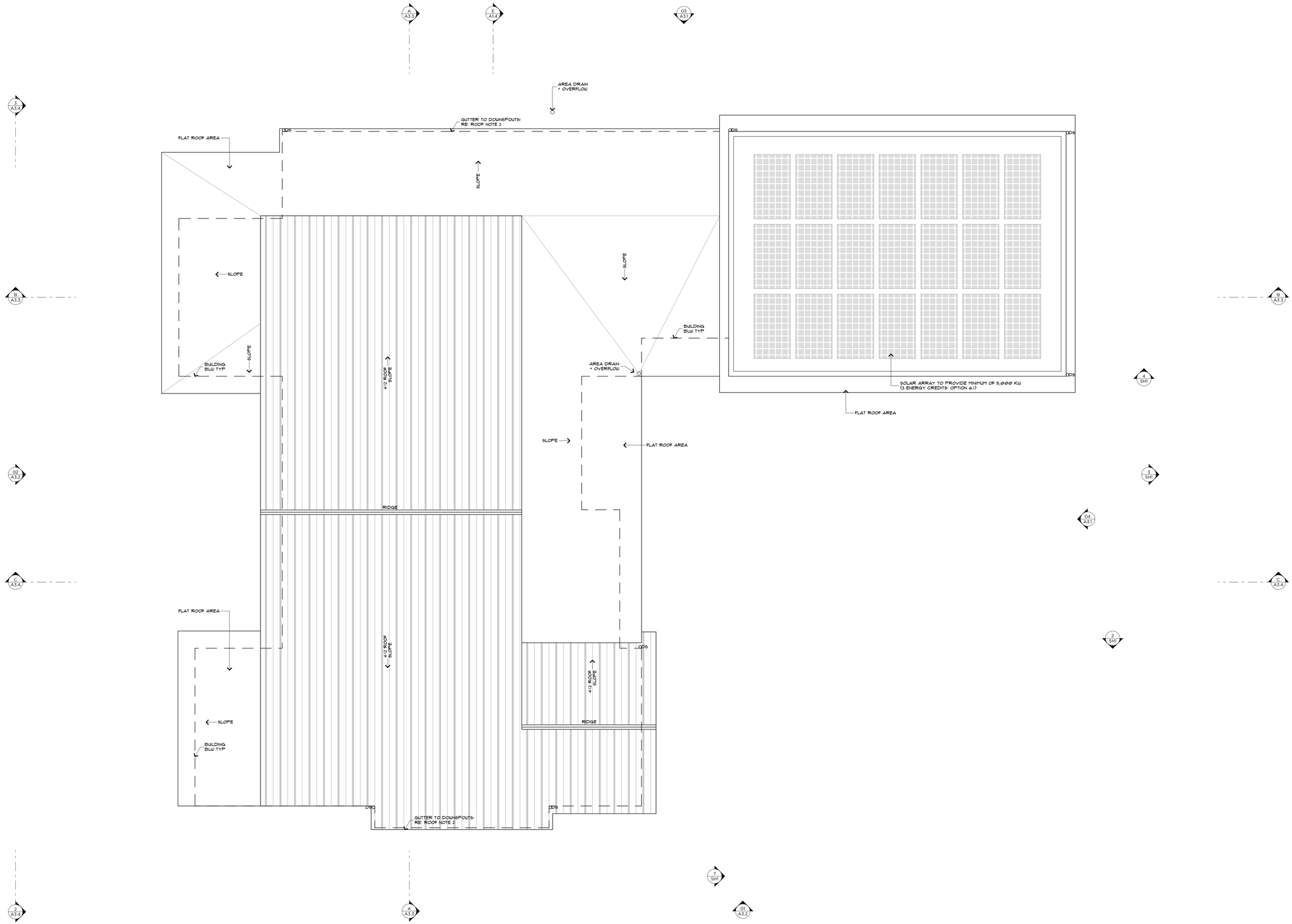

ROOF PLAN

SCALE: 1/4" = 1'-0"

N

A2.2

ZIMMER
AUTHORED OFFICE

RIPPLE
DESIGN STUDIO
206.913.2333
4303 STONE WAY N
SEATTLE, WA 98103

9790 REGISTERED ARCHITECT
JAMES M DEARTH
STATE OF WASHINGTON

ZIMMER RESIDENCE
4661 FOREST AVE SE MERCER ISLAND, WA 98040

ROOF PLAN

THIS DRAWING, AS AN INSTRUMENT OF SERVICE, IS + SHALL REMAIN THE SOLE PROPERTY OF RIPPLE DESIGN STUDIO + SHALL NOT BE REPRODUCED, PUBLISHED, OR USED IN ANY MANNER WITHOUT PROPER AUTHORIZATION.
COPYRIGHT © 2017 BY RIPPLE DESIGN STUDIO

RELEASE
7 APRIL 2025

PERMIT CORRECTIONS
9 MAY 2025

PERMIT CORRECTIONS
10 JUNE 2025

PERMIT CORRECTIONS
17 JULY 2025

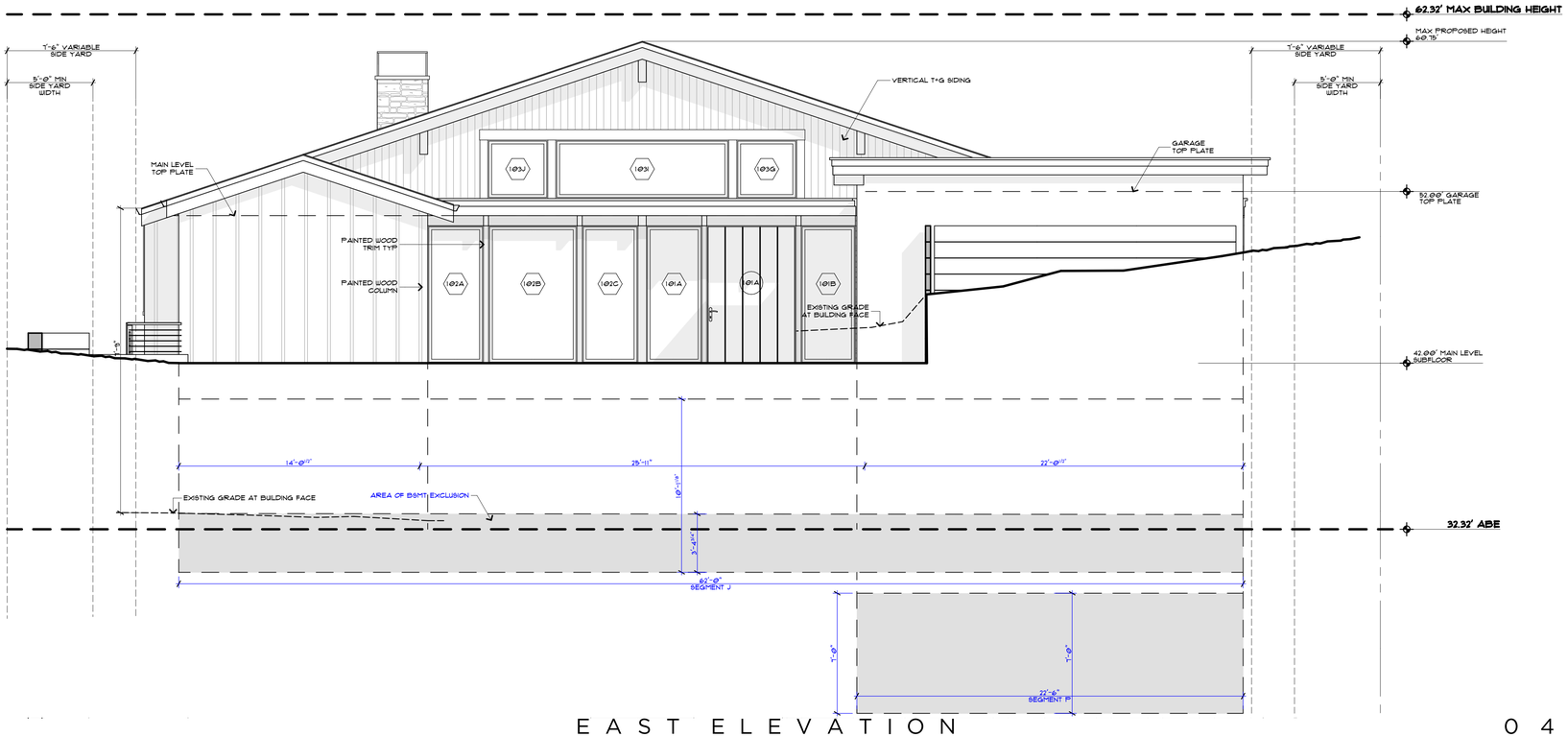

EAST ELEVATION 04

SCALE: 1/4" = 1'-0"

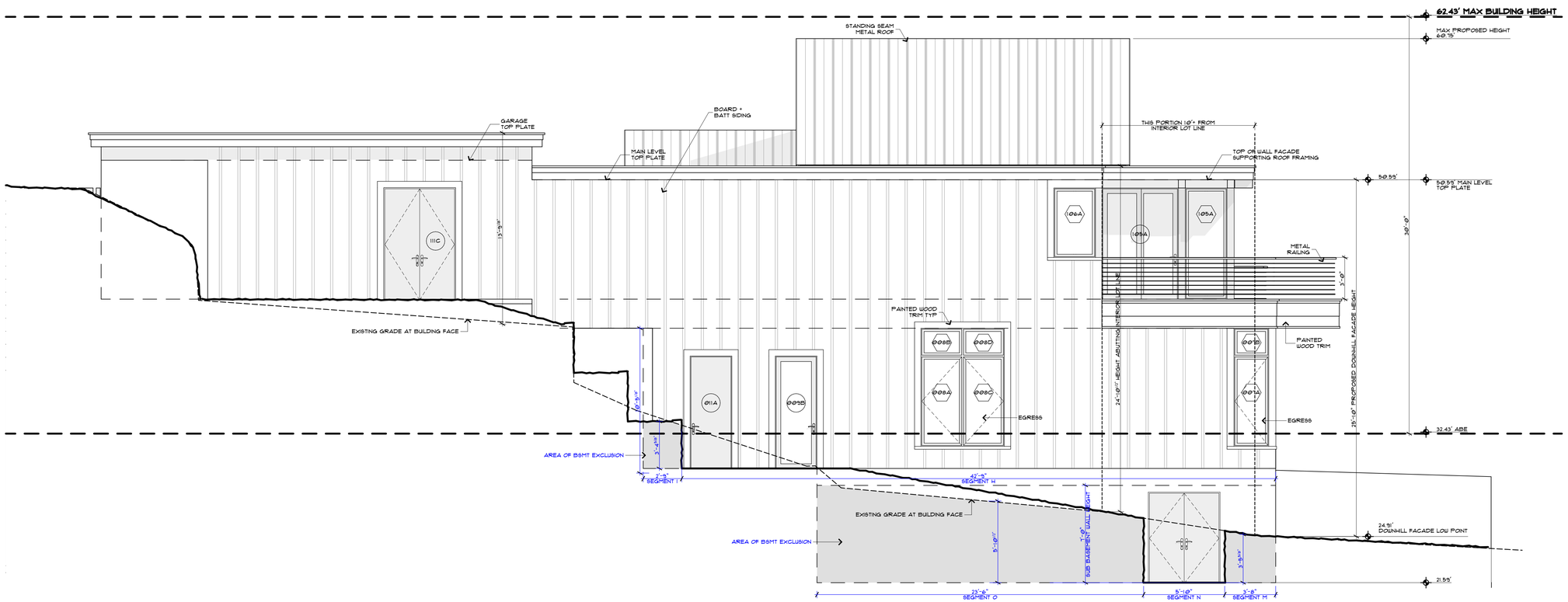

NORTH ELEVATION 03

SCALE: 1/4" = 1'-0"

RIPPLE
DESIGN STUDIO
206.913.2333
4303 STONE WAY N
SEATTLE, WA 98103

9790
REGISTERED ARCHITECT
JAMES M DEARTH
STATE OF WASHINGTON

ZIMMER RESIDENCE
4661 FOREST AVE SE
MERCER ISLAND, WA
98040

NORTH + EAST BUILDING ELEVATIONS

THIS DRAWING, AS AN INSTRUMENT OF SERVICE, IS + SHALL REMAIN THE SOLE PROPERTY OF RIPPLE DESIGN STUDIO + SHALL NOT BE REPRODUCED, PUBLISHED, OR USED IN ANY MANNER WITHOUT PROPER AUTHORIZATION.
COPYRIGHT © 2017 BY RIPPLE DESIGN STUDIO

RELEASE
7 APRIL 2025

PERMIT CORRECTIONS
9 MAY 2025

PERMIT CORRECTIONS
10 JUNE 2025

PERMIT CORRECTIONS
17 JULY 2025

A3.1

ZIMMER

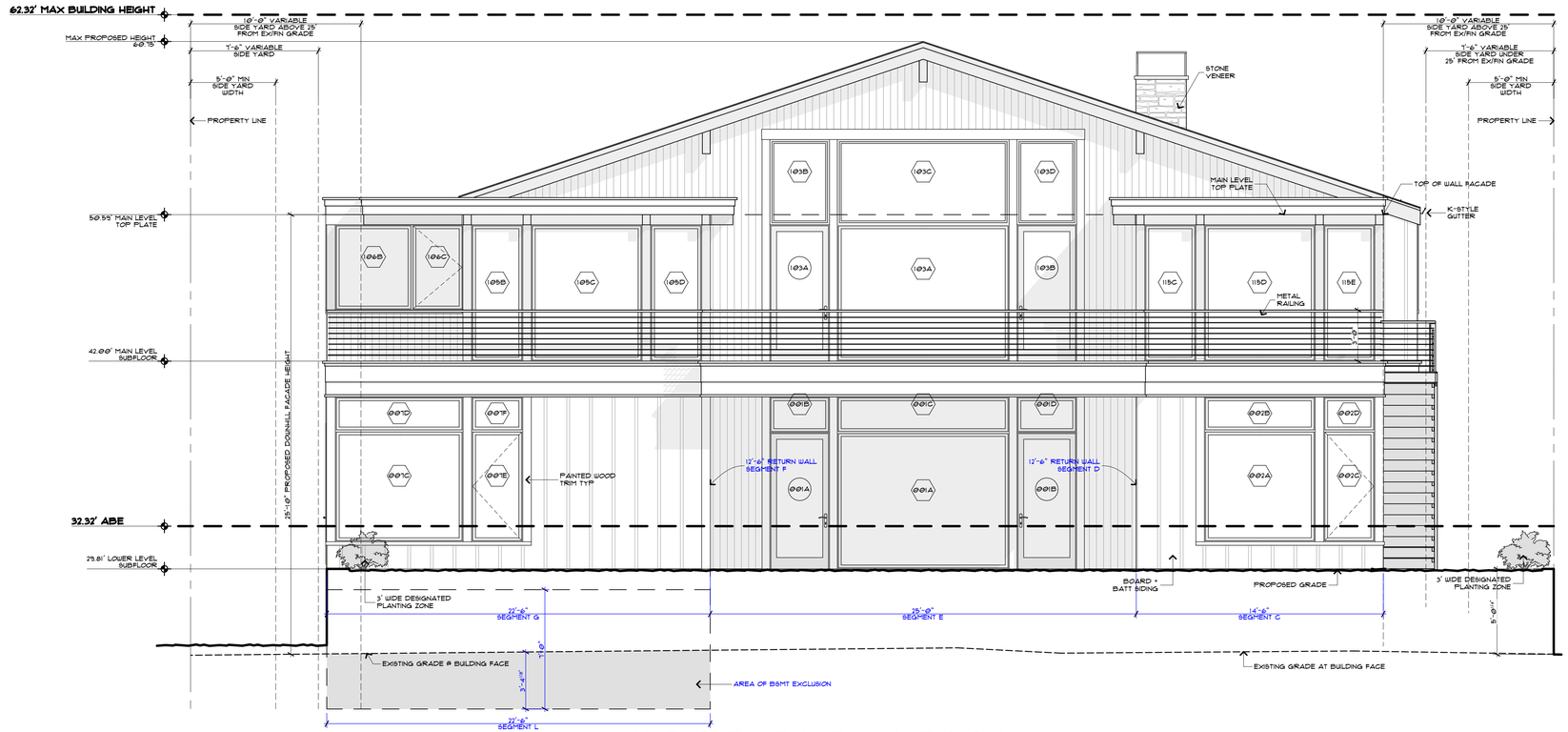

W E S T E L E V A T I O N

0 2

S C A L E : 1/4" = 1'-0"

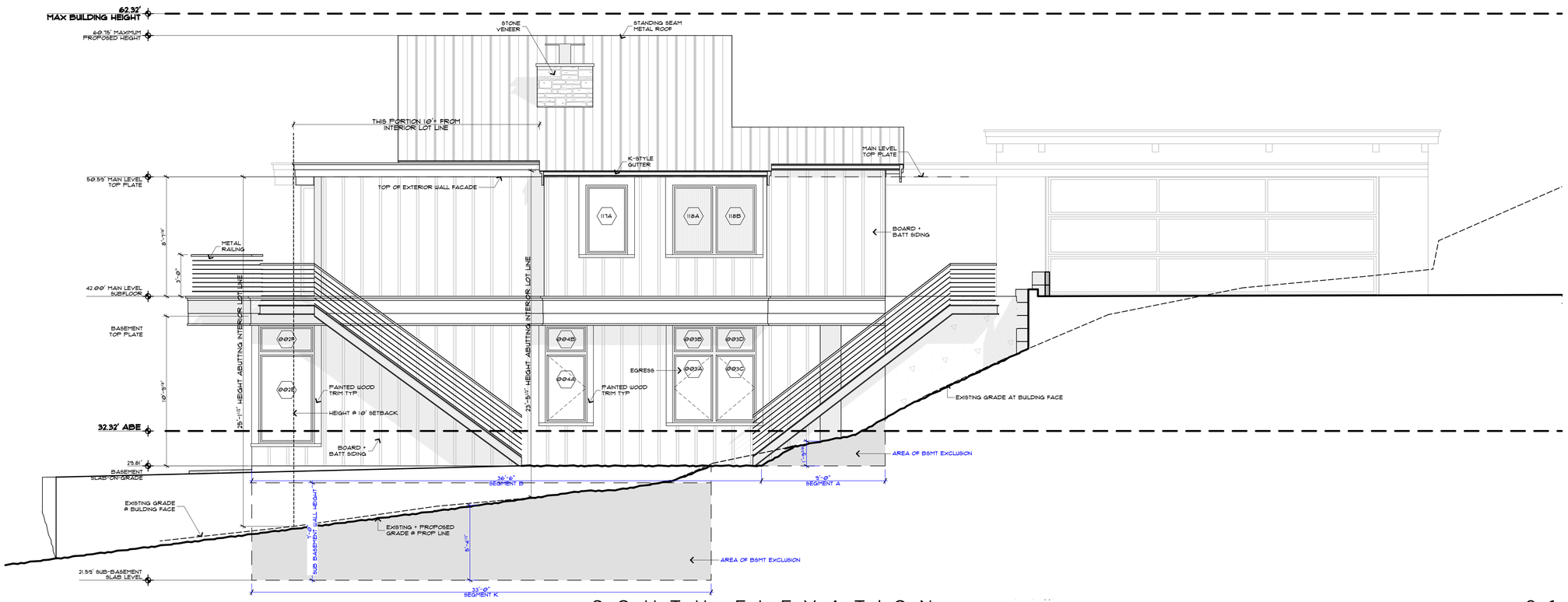

S O U T H E L E V A T I O N

0 1

S C A L E : 1/4" = 1'-0"

RIPPLE
DESIGN STUDIO
206.913.2333
4303 STONE WAY N
SEATTLE, WA 98103

9790 REGISTERED ARCHITECT
JAMES M DEARTH
STATE OF WASHINGTON

ZIMMER RESIDENCE
4661 FOREST AVE SE
MERCER ISLAND, WA
98040

SOUTH + WEST BUILDING ELEVATIONS

THIS DRAWING, AS AN INSTRUMENT OF SERVICE, IS + SHALL REMAIN THE SOLE PROPERTY OF RIPPLE DESIGN STUDIO + SHALL NOT BE REPRODUCED, PUBLISHED, OR USED IN ANY MANNER WITHOUT PROPER AUTHORIZATION.
COPYRIGHT © 2017 BY RIPPLE DESIGN STUDIO

RELEASE
7 APRIL 2025

PERMIT CORRECTIONS
9 MAY 2025

PERMIT CORRECTIONS
10 JUNE 2025

PERMIT CORRECTIONS
17 JULY 2025

A3.2

ZIMMER
AUTHORIZED SIGNER

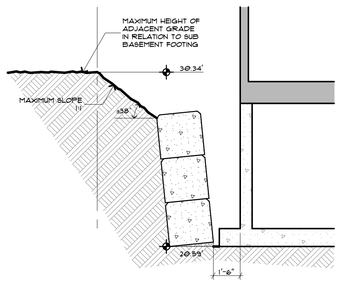

TEMP CUT DIAGRAM 3

SCALE: 1/4" = 1'-0"

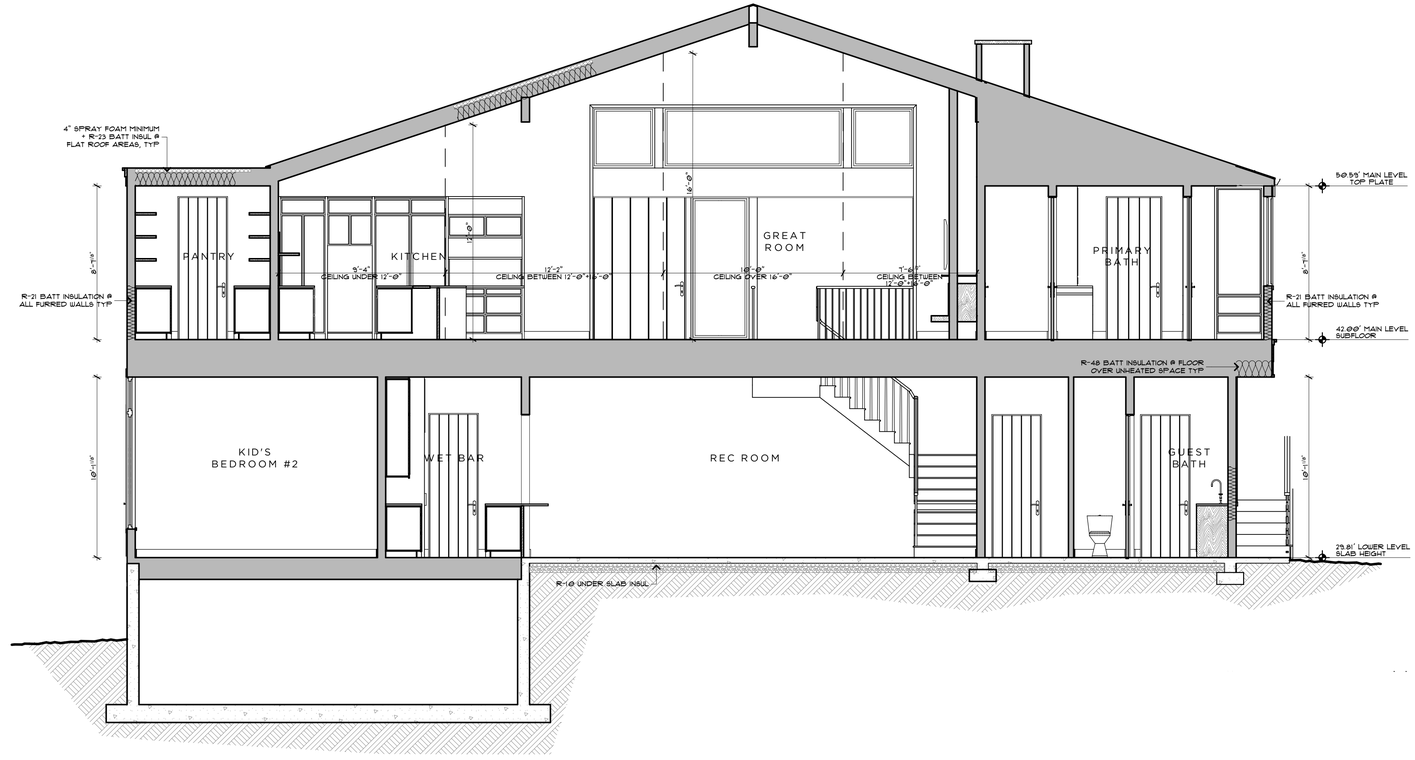

SECTION A-A

SCALE: 1/4" = 1'-0"

A

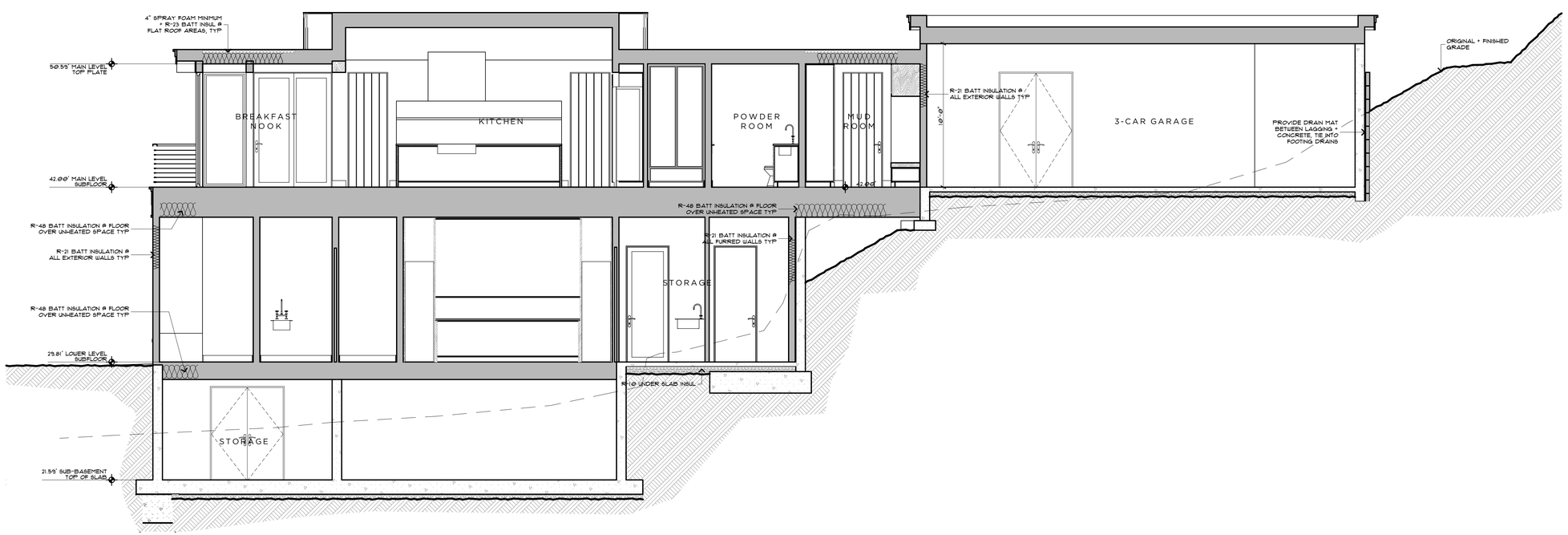

SECTION B-B

SCALE: 1/4" = 1'-0"

B

RIPPLE
DESIGN STUDIO
206.913.2333
4303 STONE WAY N
SEATTLE, WA 98103

9790 REGISTERED ARCHITECT
JAMES M DEARTH
STATE OF WASHINGTON

ZIMMER RESIDENCE
4661 FOREST AVE SE MERCER ISLAND, WA 98040

BUILDING SECTIONS A-A + B-B

THIS DRAWING, AS AN INSTRUMENT OF SERVICE, IS + SHALL REMAIN THE SOLE PROPERTY OF RIPPLE DESIGN STUDIO + SHALL NOT BE REPRODUCED, PUBLISHED, OR USED IN ANY MANNER WITHOUT PROPER AUTHORIZATION.
COPYRIGHT © 2017 BY RIPPLE DESIGN STUDIO

RELEASE
7 APRIL 2025

PERMIT CORRECTIONS
9 MAY 2025

PERMIT CORRECTIONS
10 JUNE 2025

PERMIT CORRECTIONS
17 JULY 2025

A3.3

ZIMMER
AUTHORIZED SIGNER

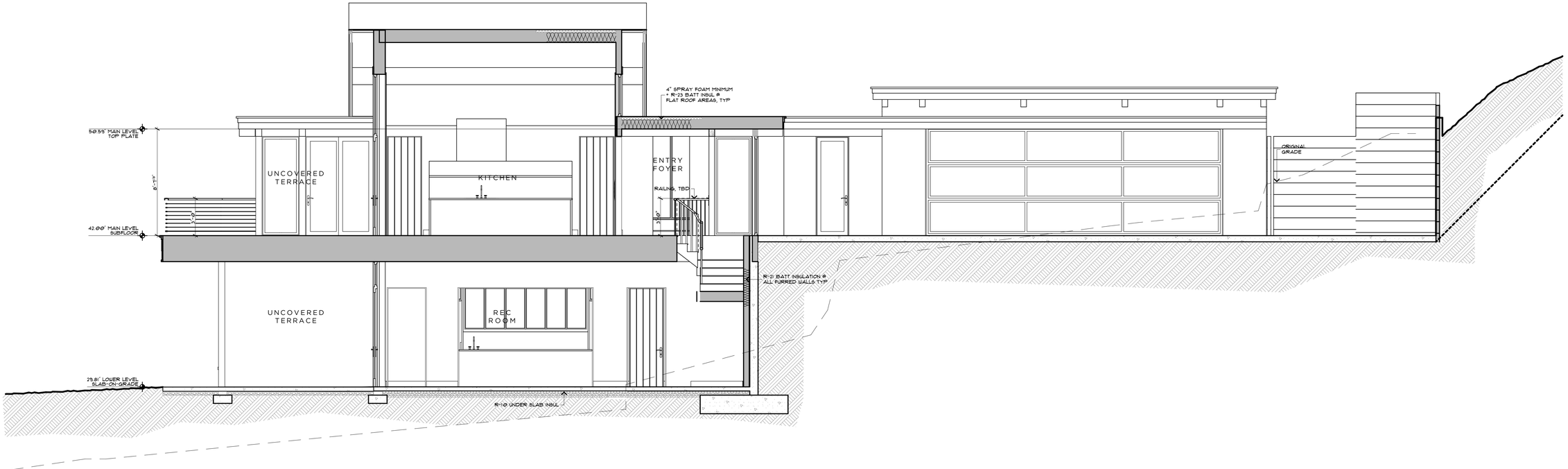

SECTION C-C

SCALE: 1/4" = 1'-0"

C

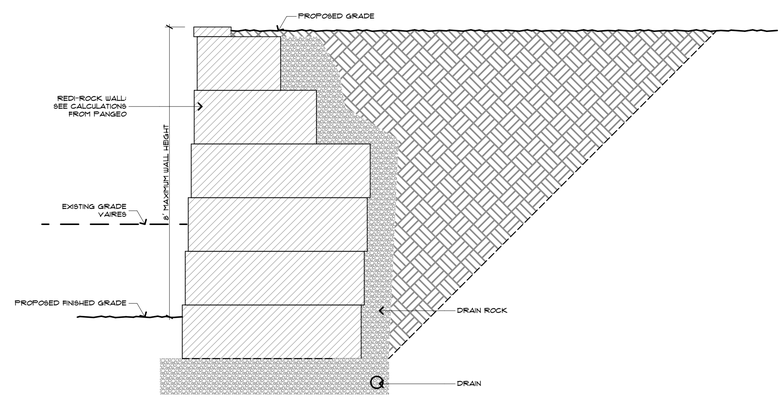

BLOCK RETAINING WALL AT NORTH

SCALE: 1/2" = 1'-0"

3

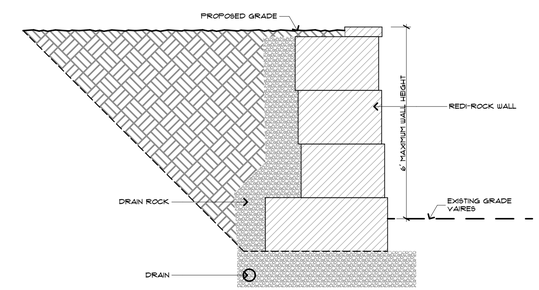

BLOCK RETAINING WALL AT SOUTH

SCALE: 1/2" = 1'-0"

2

RIPPLE
DESIGN STUDIO
206.913.2333
4303 STONE WAY N
SEATTLE, WA 98103

9790
REGISTERED ARCHITECT
JAMES M DEARTH
STATE OF WASHINGTON

ZIMMER RESIDENCE
4661 FOREST AVE SE
MERCER ISLAND, WA
98040

BUILDING SECTIONS C-C

THIS DRAWING, AS AN INSTRUMENT OF SERVICE, IS + SHALL REMAIN THE SOLE PROPERTY OF RIPPLE DESIGN STUDIO + SHALL NOT BE REPRODUCED, PUBLISHED, OR USED IN ANY MANNER WITHOUT PROPER AUTHORIZATION.
COPYRIGHT © 2017 BY RIPPLE DESIGN STUDIO

RELEASE
7 APRIL 2025

PERMIT CORRECTIONS
9 MAY 2025

PERMIT CORRECTIONS
10 JUNE 2025

PERMIT CORRECTIONS
17 JULY 2025

A3.4

ZIMMER
AUTHORIZED SIGNER

WSEC 2021 NOTES:

1. THIS PROJECT IS ELIGIBLE AND COMPLIANT W/ WSEC 2021 PRESCRIPTIVE METHOD.
2. INSULATION VALUES SHALL BE AS FOLLOWS:
   A. ALL VERTICAL GLAZING SHALL BE 0.30 U-FACTOR MAX.
   B. ALL OVERHEAD GLAZING SHALL BE 0.50 U-FACTOR MAX.
   C. ALL EXTERIOR DOORS (INCLUDING DOORS FROM CONDITIONED SPACE TO UNCONDITIONED SPACE) SHALL BE 0.20 U-FACTOR MIN.
   D. ALL CEILINGS OVER CONDITIONED SPACE SHALL RECEIVE R-49 BLOWN-IN INSULATION MIN.
   E. ALL VAULTED CEILINGS SHALL RECEIVE R-38 BATT INSULATION MIN.
   F. ALL ABOVE-GRADE EXTERIOR WALLS SHALL RECEIVE R-21 BATT INSULATION MIN.
   G. ALL BELOW-GRADE EXTERIOR WALLS SHALL RECEIVE R-21 BATT INSULATION MIN @ INTERIOR FRAMED WALL.
   H. ALL FLOORS OVER UNCONDITIONED SPACE SHALL RECEIVE R-38 BATT INSULATION MIN.
   I. ALL SLAB-ON-GRADE WITHIN CONDITIONED SPACE SHALL RECEIVE R-10 RIGID INSULATION WITHIN 24" OF SLAB PERIMETER.
   J. ALL HEADERS @ EXTERIOR WALLS SHALL RECEIVE R-10 RIGID INSULATION @ INTERIOR SIDE OF WALL.
3. RE: STRUCTURAL DRAWINGS FOR ALL FRAMING COMPLIANCE REQUIREMENTS.
4. PROVIDE 100 CFM INTERMITTENTLY OPERATING POINT-OF-USE VENTILATION @ KITCHEN.
5. PROVIDE 50 CFM INTERMITTENTLY OPERATING POINT-OF-USE VENTILATION @ ALL BATHS + LAUNDRY.
6. NATURAL GAS, PROPANE OR OIL WATER HEATER SHALL HAVE A MINIMUM EF OF 0.91 (WSEC 406.2, CREDIT 5c).
7. AT CRAWLSPACES THE MIN NET AREA OF VENTILATION OPENINGS SHALL NOT BE LESS THAN 1 FT^2 FOR EACH 300 FT^2 OF UNDER-FLOOR AREA. ONE VENTILATION OPENING SHALL BE WITHIN 3'-0" OF EACH CORNER OF THE BUILDING AT CRAWLSPACE, EXCEPT ONE SIDE OF THE BUILDING SHALL BE PERMITTED TO HAVE NO VENTILATION OPENINGS, OR CRAWLSPACE SHALL BE MECHANICALLY VENTED.
8. THE BUILDING THERMAL ENVELOPE SHALL BE CONSTRUCTED TO LIMIT AIR LEAKAGE IN ACCORDANCE WITH THE REQUIREMENTS OF SECTIONS R402.4.1 THROUGH R402.4.4. WHERE REQUIRED BY THE CODE OFFICIAL, TESTING SHALL BE CONDUCTED BY AN APPROVED THIRD PARTY AND A WRITTEN REPORT OF THE TESTING RESULTS SHALL BE SIGNED BY THE TESTING PARTY AND PROVIDED TO THE CODE OFFICIAL.
9. AT LEAST ONE THERMOSTAT PER DWELLING UNIT SHALL BE CAPABLE OF CONTROLLING THE HEATING AND COOLING SYSTEM ON A DAILY SCHEDULE.

INTERIOR DOOR SCHEDULE:

DOOR #	WIDTH	HEIGHT	TYPE	DOOR LEAF	MATERIAL	FINISH	HARDWARE	LATCHING	NOTES
002A	2'-8"	8'-0"	SWING	PANEL	WOOD	PAINTED	TBD	PRIVACY	
002B	2'-8"	8'-0"	SWING	PANEL	WOOD	PAINTED	TBD	PASSAGE	
003A	2'-8"	8'-0"	SWING	PANEL	WOOD	PAINTED	TBD	PRIVACY	
003B	2'-8"	8'-0"	SWING	PANEL	WOOD	PAINTED	TBD	PASSAGE	
004A	2'-8"	8'-0"	SWING	PANEL	WOOD	PAINTED	TBD	PRIVACY	
004B	2'-4"	8'-0"	SWING	PANEL	WOOD	PAINTED	TBD	PRIVACY	
005A	2'-8"	8'-0 1/16"	POCKET	PANEL	WOOD	PAINTED	TBD	PASSAGE	
006A	2'-8"	8'-0"	SWING	PANEL	WOOD	PAINTED	TBD	PRIVACY	
006B	2'-8"	8'-0"	SWING	PANEL	WOOD	PAINTED	TBD	PASSAGE	
007A	2'-8"	8'-0"	SWING	PANEL	WOOD	PAINTED	TBD	PRIVACY	
007B	2'-4"	8'-0"	SWING	PANEL	WOOD	PAINTED	TBD	PASSAGE	
008A	2'-8"	8'-0 1/16"	SWING	PANEL	WOOD	PAINTED	TBD	PRIVACY	
008B	2'-4"	8'-0 1/16"	SWING	PANEL	WOOD	PAINTED	TBD	PASSAGE	
009A	2'-8"	8'-0"	SWING	PANEL	WOOD	PAINTED	TBD	PASSAGE	
010A	2'-8"	8'-0"	SWING	PANEL	WOOD	PAINTED	TBD	PASSAGE	ELEVATOR, LOCKING
104A	2'-8"	8'-0"	POCKET	PANEL	WOOD	PAINTED	TBD	PASSAGE	
106A	2'-8"	8'-0"	POCKET	PANEL	WOOD	PAINTED	TBD	PASSAGE	
109A	3'-0"	8'-0"	SWING	PANEL	WOOD	PAINTED	TBD	PASSAGE	20 MIN RATED, AUTO-CLOSE
109B	2'-8"	8'-0"	POCKET	PANEL	WOOD	PAINTED	TBD	PASSAGE	
109C	2'-8"	8'-0"	POCKET	PANEL	WOOD	PAINTED	TBD	PASSAGE	
110B	2'-8"	8'-0"	POCKET	PANEL	WOOD	PAINTED	TBD	PASSAGE	
112A	2'-8"	8'-0"	SWING	PANEL	WOOD	STAINED	TBD	PASSAGE	ELEVATOR, LOCKING
113A	2'-8"	8'-0"	SWING	PANEL	WOOD	STAINED	TBD	PRIVACY	
114A	2'-8"	8'-0"	SWING	PANEL	WOOD	STAINED	TBD	PRIVACY	
116A	3'-0"	8'-0"	POCKET	PANEL	WOOD	PAINTED	TBD	PASSAGE	
117A	2'-8"	8'-0"	SWING	PANEL	WOOD	STAINED	TBD	PRIVACY	
119A	3'-0"	8'-0"	POCKET	PANEL	WOOD	PAINTED	TBD	PASSAGE	

EXTERIOR DOOR SCHEDULE: (ALL GLAZING TO BE NFRC CERTIFIED)

DOOR #	WIDTH	HEIGHT	TYPE	DOOR LEAF	MATERIAL	FINISH	GLAZING	HARDWARE	NOTES
000	5'-0"	6'-6"	SWING	PANEL	FIBERGLASS	TBD	NONE	TBD	
001A	3'-6"	8'-0"	SWING	FULL LIGHT	CLAD WOOD	PAINTED	LoE3 366	TBD	
001B	3'-6"	8'-0"	SWING	FULL LIGHT	CLAD WOOD	PAINTED	LoE3 366	TBD	
009B	3'-0"	8'-11 1/16"	SWING	FULL LIGHT	CLAD WOOD	PAINTED	LoE3 366	TBD	
011A	3'-0"	8'-11 1/16"	SWING	PANEL	FIBERGLASS	TBD	NONE	TBD	
101A	5'-2 1/2"	8'-0"	PIVOT	PANEL	WOOD	STAINED	NONE	TBD	
103A	3'-6"	8'-0"	SWING	FULL LIGHT	CLAD WOOD	PAINTED	LoE3 366	TBD	
103B	3'-6"	8'-0"	SWING	FULL LIGHT	CLAD WOOD	PAINTED	LoE3 366	TBD	
105A	5'-6"	8'-0"	SLIDER	FULL LIGHT	CLAD WOOD	PAINTED	LoE3 366	TBD	SLIDING SCREEN DOOR
105A	5'-6"	8'-0"	SLIDER	FULL LIGHT	CLAD WOOD	PAINTED	LoE3 366	TBD	SLIDING SCREEN DOOR
110A	2'-8"	8'-0"	SWING	FULL LIGHT	CLAD WOOD	STAINED	LoE3 366	TBD	
111A	24'-0"	8'-9 1/2"	OVERHEAD	PANEL	WOOD/GLASS	PAINTED	NONE	TBD	
111C	5'-0"	8'-0"	SWING	PANEL	FIBERGLASS	TBD	NONE	TBD	PAIR

WINDOW SCHEDULE: (ALL GLAZING TO BE NFRC CERTIFIED)

WDW #	WIDTH	HEIGHT	HEADER	TYPE	FINISH	GLAZING	WDW COVERING	OPERATION	HARDWARE	NOTES
001A	10'-1"	8'-0"	8'-0"	FIXED	PAINTED	LoE3 366	---	---	TBD	SAFETY GLAZING
001B	3'-6"	2'-11 1/16"	10'-11 1/16"	TRANSOM	PAINTED	LoE3 366	---	---	TBD	
001C	10'-1"	2'-11 1/16"	10'-11 1/16"	TRANSOM	PAINTED	LoE3 366	---	---	TBD	
001D	3'-6"	2'-11 1/16"	10'-11 1/16"	TRANSOM	PAINTED	LoE3 366	---	---	TBD	
002A	6'-6"	6'-6"	8'-11 1/16"	FIXED	PAINTED	LoE3 366	---	---	TBD	
002B	6'-6"	2'-0"	10'-11 1/16"	TRANSOM	PAINTED	LoE3 366	---	---	TBD	
002C	3'-0"	6'-6"	8'-11 1/16"	CASEMENT	PAINTED	LoE3 366	---	---	TBD	
002D	3'-0"	2'-0"	10'-11 1/16"	CASEMENT	PAINTED	LoE3 366	---	---	TBD	EGRESS
002E	4'-0"	6'-6"	8'-11 1/16"	CASEMENT	PAINTED	LoE3 366	---	---	TBD	
002F	4'-0"	2'-0"	10'-11 1/16"	TRANSOM	PAINTED	LoE3 366	---	---	TBD	
003A	3'-0"	5'-0"	8'-11 1/16"	CASEMENT	PAINTED	LoE3 366	---	---	TBD	EGRESS, SAFETY GLAZING
003B	3'-0"	2'-0"	10'-11 1/16"	TRANSOM	PAINTED	LoE3 366	---	---	TBD	
003C	3'-0"	5'-0"	8'-11 1/16"	CASEMENT	PAINTED	LoE3 366	---	---	TBD	EGRESS, SAFETY GLAZING
003D	3'-0"	2'-0"	10'-11 1/16"	TRANSOM	PAINTED	LoE3 366	---	---	TBD	
004A	3'-0"	5'-0"	8'-11 1/16"	CASEMENT	PAINTED	LoE3 366	---	---	TBD	SAFETY GLAZING
004B	3'-0"	2'-0"	10'-11 1/16"	TRANSOM	PAINTED	LoE3 366	---	---	TBD	
007A	2'-6"	6'-6"	8'-11 1/16"	CASEMENT	PAINTED	LoE3 366	---	---	TBD	EGRESS
007B	2'-6"	2'-0"	10'-11 1/16"	TRANSOM	PAINTED	LoE3 366	---	---	TBD	
007C	7'-6"	6'-6"	8'-11 1/16"	FIXED	PAINTED	LoE3 366	---	---	TBD	
007D	7'-6"	2'-0"	10'-11 1/16"	TRANSOM	PAINTED	LoE3 366	---	---	TBD	
007E	3'-0"	6'-6"	8'-11 1/16"	CASEMENT	PAINTED	LoE3 366	---	---	TBD	
007F	3'-0"	2'-0"	10'-11 1/16"	TRANSOM	PAINTED	LoE3 366	---	---	TBD	
008A	3'-0"	6'-6"	8'-11 1/16"	CASEMENT	PAINTED	LoE3 366	---	---	TBD	EGRESS
008B	3'-0"	2'-0"	10'-11 1/16"	TRANSOM	PAINTED	LoE3 366	---	---	TBD	
008C	3'-0"	6'-6"	8'-11 1/16"	CASEMENT	PAINTED	LoE3 366	---	---	TBD	EGRESS
008D	3'-0"	2'-0"	10'-11 1/16"	TRANSOM	PAINTED	LoE3 366	---	---	TBD	
101A	3'-3"	8'-0"	8'-0"	FIXED	PAINTED	LoE3 366	---	---	TBD	SAFETY GLAZING
101B	3'-2"	8'-0"	8'-0"	FIXED	PAINTED	LoE3 366	---	---	TBD	SAFETY GLAZING
102A	3'-3"	8'-0"	8'-0"	FIXED	PAINTED	LoE3 366	---	---	TBD	SAFETY GLAZING
102B	5'-2"	8'-0"	8'-0"	FIXED	PAINTED	LoE3 366	---	---	TBD	SAFETY GLAZING
102C	3'-3"	8'-0"	8'-0"	FIXED	PAINTED	LoE3 366	---	---	TBD	SAFETY GLAZING
102D	3'-0"	8'-0"	8'-0"	CASEMENT	PAINTED	LoE3 366	---	---	TBD	SAFETY GLAZING
103A	10'-1"	8'-0"	8'-0"	FIXED	PAINTED	LoE3 366	---	---	TBD	SAFETY GLAZING
103B	3'-6"	5'-0"	1'-7 1/16"	FIXED	PAINTED	LoE3 366	---	---	TBD	
103C	10'-1"	5'-0"	1'-7 1/16"	FIXED	PAINTED	LoE3 366	---	---	TBD	
103D	3'-6"	5'-0"	1'-7 1/16"	FIXED	PAINTED	LoE3 366	---	---	TBD	
103G	3'-6"	3'-5"	4'-5"	CASEMENT	PAINTED	NONE	---	---	TBD	
103I	10'-1"	3'-5"	4'-5"	CASEMENT	PAINTED	NONE	---	---	TBD	
103J	3'-6"	3'-5"	4'-5"	CASEMENT	PAINTED	NONE	---	---	TBD	
105A	3'-0"	8'-0"	8'-0"	FIXED	PAINTED	LoE3 366	---	---	TBD	
105B	3'-0"	8'-0"	8'-0"	FIXED	PAINTED	LoE3 366	---	---	TBD	
105C	6'-6"	8'-0"	8'-0"	FIXED	PAINTED	LoE3 366	---	---	TBD	
105D	3'-0"	8'-0"	8'-0"	FIXED	PAINTED	LoE3 366	---	---	TBD	
105E	3'-0"	8'-0"	8'-0"	FIXED	PAINTED	LoE3 366	---	---	TBD	
106A	3'-0"	5'-0"	8'-0"	FIXED	PAINTED	LoE3 366	---	---	TBD	
106B	4'-6"	5'-0"	8'-0"	FIXED	PAINTED	LoE3 366	---	---	TBD	
106C	3'-0"	5'-0"	8'-0"	CASEMENT	PAINTED	LoE3 366	---	---	TBD	
115A	4'-0"	8'-0"	8'-0"	FIXED	PAINTED	LoE3 366	---	---	TBD	
115B	3'-0"	8'-0"	8'-0"	CASEMENT	PAINTED	LoE3 366	---	---	TBD	EGRESS
115C	3'-0"	8'-0"	8'-0"	FIXED	PAINTED	LoE3 366	---	---	TBD	
115D	6'-6"	8'-0"	8'-0"	FIXED	PAINTED	LoE3 366	---	---	TBD	
115E	3'-0"	8'-0"	8'-0"	FIXED	PAINTED	LoE3 366	---	---	TBD	
117A	3'-0"	5'-0"	8'-0"	FIXED	PAINTED	LoE3 366	---	---	TBD	SAFETY GLAZING
118A	3'-0"	5'-0"	8'-0"	FIXED	TBD	LoE3 366	---	---	TBD	FROSTED / TRANSLUCENT GLAZING, SAFETY GLAZING
118B	3'-0"	5'-0"	8'-0"	FIXED	TBD	LoE3 366	---	---	TBD	FROSTED / TRANSLUCENT GLAZING, SAFETY GLAZING

RIPPLE
DESIGN STUDIO
206.913.2333
4303 STONE WAY N
SEATTLE, WA 98103

9790
REGISTERED ARCHITECT
JAMES M DEARTH
STATE OF WASHINGTON

ZIMMER RESIDENCE
4661 FOREST AVE SE
MERCER ISLAND, WA
98040

DOOR + WINDOW SCHEDULES

THIS DRAWING, AS AN INSTRUMENT OF SERVICE, IS + SHALL REMAIN THE SOLE PROPERTY OF RIPPLE DESIGN STUDIO + SHALL NOT BE REPRODUCED, PUBLISHED, OR USED IN ANY MANNER WITHOUT PROPER AUTHORIZATION.
COPYRIGHT © 2017 BY RIPPLE DESIGN STUDIO

RELEASE
7 APRIL 2025

PERMIT CORRECTIONS
9 MAY 2025

PERMIT CORRECTIONS
10 JUNE 2025

PERMIT CORRECTIONS
17 JULY 2025

General Structural Notes

The Following Apply Unless Noted Otherwise on the Drawings

Criteria

1. ALL MATERIALS, WORKMANSHIP, DESIGN, AND CONSTRUCTION SHALL CONFORM TO THE DRAWINGS, SPECIFICATIONS, AND THE 2021 INTERNATIONAL BUILDING CODE.
2. DESIGN LOAD CRITERIA

FLOOR LIVE LOAD (RESIDENTIAL)	40 PSF
FLOOR LIVE LOAD (RESIDENTIAL DECKS)	60 PSF
ROOF DEAD LOAD (SOLAR)	5 PSF
ROOF DEAD LOAD (BALLAST)	17 PSF
SNOW	Pf=25 PSF
WIND	Iw=1.0, GCpi=0.18, 100 MPH (ULTIMATE), EXPOSURE "C", KZT=1.00
EARTHQUAKE	
ANALYSIS PROCEDURE:	EQUIVALENT LATERAL FORCE PROCEDURE
LATERAL SYSTEM:	LIGHT FRAMED SHEAR WALLS
BASE SHEAR (ULTIMATE)	V=21.47 KIPS
BASE SHEAR (ULTIMATE)	V=2.16 KIPS
TOTAL BASE SHEAR	V=23.63 KIPS
SITE CRITERIA	SITE CLASS=D, Ss=1.441, Sds=0.961, S1=0.5, SD1=0.6, Cs=0.148 SDC D, Ie=1.0, R=6.5

SEE PLANS FOR ADDITIONAL LOADING CRITERIA

3. STRUCTURAL DRAWINGS SHALL BE USED IN CONJUNCTION WITH ARCHITECTURAL DRAWINGS FOR BIDDING AND CONSTRUCTION. CONTRACTOR SHALL VERIFY DIMENSIONS AND CONDITIONS FOR COMPATIBILITY AND SHALL NOTIFY ARCHITECT OF ANY DISCREPANCIES PRIOR TO CONSTRUCTION.
4. CONTRACTOR SHALL VERIFY ALL EXISTING DIMENSIONS, MEMBER SIZES, AND CONDITIONS PRIOR TO COMMENCING ANY WORK. ALL DIMENSIONS OF EXISTING CONSTRUCTION SHOWN ON THE DRAWINGS ARE INTENDED AS GUIDELINES ONLY AND MUST BE VERIFIED.
5. CONTRACTOR SHALL PROVIDE TEMPORARY BRACING FOR THE STRUCTURE AND STRUCTURAL COMPONENTS UNTIL ALL FINAL CONNECTIONS HAVE BEEN COMPLETED IN ACCORDANCE WITH THE PLANS.
6. CONTRACTOR SHALL BE RESPONSIBLE FOR ALL SAFETY PRECAUTIONS AND THE METHODS, TECHNIQUES, SEQUENCES OR PROCEDURES, REQUIRED TO PERFORM THE CONTRACTORS WORK. THE STRUCTURAL ENGINEER HAS NO OVERALL SUPERVISORY AUTHORITY OR ACTUAL AND/OR DIRECT RESPONSIBILITY FOR THE SPECIFIC WORKING CONDITIONS AT THE SITE AND/OR FOR ANY HAZARDS RESULTING FROM THE ACTIONS OF ANY TRADE CONTRACTOR. THE STRUCTURAL ENGINEER HAS NO DUTY TO INSPECT, SUPERVISE, NOTE, CORRECT, OR REPORT ANY HEALTH OR SAFETY DEFICIENCIES TO THE OWNER, CONTRACTORS, OR OTHER ENTITIES OR PERSONS AT THE PROJECT SITE.
7. CONTRACTOR-INITIATED CHANGES SHALL BE SUBMITTED IN WRITING TO THE ARCHITECT AND STRUCTURAL ENGINEER FOR APPROVAL PRIOR TO FABRICATION OR CONSTRUCTION. CHANGES SHOWN ON SHOP DRAWINGS ONLY WILL NOT SATISFY THIS REQUIREMENT.
8. DRAWINGS INDICATE GENERAL AND TYPICAL DETAILS OF CONSTRUCTION. WHERE CONDITIONS ARE NOT SPECIFICALLY INDICATED BUT ARE OF SIMILAR CHARACTER TO DETAILS SHOWN, SIMILAR DETAILS OF CONSTRUCTION SHALL BE USED, SUBJECT TO REVIEW AND APPROVAL BY THE ARCHITECT AND THE STRUCTURAL ENGINEER.
9. SHOP DRAWINGS FOR THE FOLLOWING ITEMS SHALL BE SUBMITTED TO THE ARCHITECT AND STRUCTURAL ENGINEER FOR REVIEW PRIOR TO FABRICATION OF THESE ITEMS.
   OPEN WEB WOOD (OR COMBINATION WOOD/STEEL) TRUSSES
   STRUCTURAL STEEL
   CONTRACTOR SHALL SUBMIT WALL ELEVATION DRAWINGS OF AT LEAST 1/8"=1'-0" SCALE INDICATING LOCATIONS OF CONNECTION EMBEDMENTS AND WALL OPENINGS FOR REVIEW PRIOR TO CONSTRUCTION. CONTRACTOR SHALL COORDINATE WITH REINFORCEMENT SHOP DRAWINGS.
   APPROVED SETS OF ALL SHOP DRAWINGS SHALL ALSO BE SUBMITTED TO THE BUILDING DEPARTMENT.
10. SHOP DRAWING REVIEW: DIMENSIONS AND QUANTITIES ARE NOT REVIEWED BY THE ENGINEER OF RECORD, THEREFORE MUST BE VERIFIED BY THE CONTRACTOR. CONTRACTOR SHALL REVIEW AND STAMP DRAWINGS PRIOR TO REVIEW BY ENGINEER OF RECORD. CONTRACTOR SHALL REVIEW DRAWINGS FOR CONFORMANCE WITH THE MEANS, METHODS, TECHNIQUES, SEQUENCES AND OPERATIONS OF CONSTRUCTION, AND ALL SAFETY PRECAUTIONS AND PROGRAMS INCIDENTAL THERETO. SUBMITTALS SHALL INCLUDE A REPRODUCIBLE AND ONE COPY; REPRODUCIBLE WILL BE MARKED AND RETURNED WITHIN TWO WEEKS OF RECEIPT WITH A NOTATION INDICATING THAT THE SUBMITTAL HAS BEEN FOUND TO BE IN GENERAL CONFORMANCE WITH THE DESIGN OF THE BUILDING. THE SUBMITTED ITEMS SHALL NOT BE INSTALLED UNTIL THEY HAVE BEEN APPROVED BY THE BUILDING OFFICIAL.
    SHOP DRAWING SUBMITTALS PROCESSED BY THE ENGINEER ARE NOT CHANGE ORDERS. THE PURPOSE OF SHOP DRAWING SUBMITTALS BY THE CONTRACTOR IS TO DEMONSTRATE TO THE ENGINEER THAT THE CONTRACTOR UNDERSTANDS THE DESIGN CONCEPT, BY INDICATING WHICH MATERIAL IS INTENDED TO BE FURNISHED AND INSTALLED AND BY DETAILING THE INTENDED FABRICATION AND INSTALLATION METHODS. IF DEVIATIONS, DISCREPANCIES, OR CONFLICTS BETWEEN SHOP DRAWING SUBMITTALS AND THE CONTRACT DOCUMENTS ARE DISCOVERED EITHER PRIOR TO OR AFTER SHOP DRAWING SUBMITTALS ARE PROCESSED BY THE ENGINEER, THE DESIGN DRAWINGS AND SPECIFICATIONS SHALL CONTROL AND SHALL BE FOLLOWED.

Quality Assurance

1. SPECIAL INSPECTION SHALL BE PROVIDED IN ACCORDANCE WITH THE PROJECT SPECIFICATIONS AND SECTIONS 110 AND 1704 OF THE INTERNATIONAL BUILDING CODE BY A QUALIFIED TESTING AGENCY DESIGNATED BY THE ARCHITECT, AND RETAINED BY THE BUILDING OWNER. THE ARCHITECT, STRUCTURAL ENGINEER, AND BUILDING DEPARTMENT SHALL BE FURNISHED WITH COPIES OF ALL INSPECTION AND TEST RESULTS. SPECIAL INSPECTION IS REQUIRED OF THE FOLLOWING TYPES OF CONSTRUCTION:

STRUCTURAL STEEL FABRICATION AND ERECTION	PER IBC 1705.2
CONCRETE CONSTRUCTION (GRADE BEAMS, AUGER-CAST PILES)	PER TABLE 1705.3
SOIL CONDITIONS, FILL PLACEMENT, AND DENSITY	PER SOILS REPORT
PILE OR PIER FOUNDATIONS	PER SOILS REPORT
EXPANSION BOLTS AND THREADED EXPANSION INSERTS	PER MANUFACTURER
EPOXY GROUTED INSTALLATIONS	PER MANUFACTURER

2. UNLESS OTHERWISE NOTED, THE FOLLOWING ELEMENTS COMPRISE THE SEISMIC-FORCE-RESISTING SYSTEM AND ARE SUBJECT TO SPECIAL INSPECTION FOR SEISMIC RESISTANCE IN ACCORDANCE WITH SECTION 1705.12 OF THE INTERNATIONAL BUILDING CODE.
   A. STRUCTURAL STEEL MOMENT FRAMES AND BRACED FRAMES REQUIRE CONTINUOUS INSPECITON FOR WELDING PER AISC 341 EXCEPT SINGLE PASS FILLET WELDS NOT EXCEEDING 5/16-INCH.

Geotechnical

1. FOUNDATION NOTES: SUBGRADE PREPARATION INCLUDING DRAINAGE, EXCAVATION, COMPACTION, AND FILLING REQUIREMENTS, SHALL CONFORM STRICTLY WITH RECOMMENDATIONS GIVEN IN THE SOILS REPORT OR AS DIRECTED BY THE SOILS ENGINEER. FOOTINGS SHALL BEAR ON SOLID UNDISTURBED EARTH AT LEAST 18" BELOW LOWEST ADJACENT FINISHED GRADE. FOOTING DEPTHS/ELEVATIONS SHOWN ONPLANS (OR IN DETAILS) ARE MINIMUM AND FOR GUIDANCE ONLY; THE ACTUAL ELEVATIONS OF FOOTINGS MUST BE ESTABLISHED BY THE CONTRACTOR IN THE FIELD WORKING WITH THE TESTING LAB AND SOILS ENGINEER. BACKFILL BEHIND ALL RETAINING WALLS WITH FREE DRAINING GRANULAR FILL AND PROVIDE FOR SUBSURFACE DRAINAGE AS NOTED IN THE SOILS REPORT.

LATERAL EARTH PRESSURE (RESTRAINED/UNRESTRAINED)	VARIES 7 PCF-55 PCF SEE SOILS REPORT
COEFICIENT OF FRICTION (FACTOR OF SAFETY OF 1.5 INCLUDED)	0.35
3"Ø PILE CAPACITY (COMPRESSION) (STANDARD STEEL PIPE)	12 KIPS
4"Ø PILE CAPACITY (COMPRESSION) (STANDARD STEEL PIPE)	20 KIPS

REFUSAL CRITERIA: 2000-POUND HYDRAULIC HAMMER, 1" OR LESS FOR 10 SECONDS OF CONTINUOUS DRIVING AT 600 BLOWS PER MINUTE.
ANTICIPATED PILE LENGTH TO REACH BEARING SOILS: APPROXIMATELY 20'-30'+/-

2 30"Ø AUGER-CAST PILE — SKIN FRICTION = 1.0 KSF, END BEARING = 30 KSF

GEOTECHNICAL SPECIAL INSPECTOR SHALL BE CONTINUOUSLY PRESENT DURING ALL PILE INSTALLATIONS.

SOILS REPORT REFERENCE: PanGEO Inc., Project No. 21-552, Dated October 2024

2. PIN PILES SHALL BE DRIVEN TO REFUSAL PER THE REFUSAL CRITERIA ABOVE. THE MAXIMUM PILE ECCENTRICITY SHALL BE 3 INCHES. THE CONTRACTOR SHALL DETERMINE THE LOCATION OF ALL ADJACENT UNDERGROUND UTILITIES PRIOR TO DRIVING PILES.

2

3. QUICK TESTING SHALL BE PERFORMED ON A MINIMUM OF 3% OF PILES UP TO (5) PILES MAXIMUM (1 MINIMUM) FOR EACH PILE DIAMETER TO BE USED ON THE PROJECT PER ASTM STANDARD D 1143-81.

Concrete

1. CONCRETE SHALL BE MIXED, PROPORTIONED, CONVEYED AND PLACED IN ACCORDANCE WITH IBC SECTION 1905, 1906, AND ACI 301. STRENGTHS AT 28 DAYS AND MIX CRITERIA SHALL BE AS FOLLOWS:

TYPE OF CONSTRUCTION	28 DAY STRENGTH (f'c)
SLABS ON GRADE STAIR LANDINGS AND TREADS	3,000 PSI*
ALL STRUCTURAL CONCRETE EXCEPT WALLS	4,000 PSI
CONCRETE WALLS	2,500 PSI
AUGERCAST PILING (STRUCTURAL CONCRETE)	4,000 PSI (10) SACK MIX (940 LBS CEMENT)

*STRUCTURAL DESIGN OF FOUNDATION IS BASED ON A f'c=2,500 PSI, PER IBC 1705.3.2.3, SPECIAL INSPECTION IS NOT REQUIRED

2. THE MINIMUM AMOUNTS OF CEMENT MAY BE CHANGED IF A CONCRETE PERFORMANCE MIX IS SUBMITTED TO THE STRUCTURAL ENGINEER AND THE BUILDING DEPARTMENT FOR APPROVAL TWO WEEKS PRIOR TO PLACING ANY CONCRETE. THE PERFORMANCE MIX SHALL INCLUDE THE AMOUNTS OF CEMENT, FINE AND COARSE AGGREGATE, WATER AND ADMIXTURES AS WELL AS THE WATER CEMENT RATIO, SLUMP, CONCRETE YIELD AND SUBSTANTIATING STRENGTH DATA IN ACCORDANCE WITH IBC 1905.6. THE USE OF A PERFORMANCE MIX REQUIRES BATCH PLANT INSPECTION, THE COST OF WHICH SHALL BE PAID BY THE GENERAL CONTRACTOR. REVIEW OF MIX SUBMITTALS BY THE ENGINEER OF RECORD INDICATES ONLY THAT INFORMATION PRESENTED CONFORMS GENERALLY TO THE CONTRACT DOCUMENTS. CONTRACTOR OR SUPPLIER MAINTAINS FULL RESPONSIBILITY FOR SPECIFIED PERFORMANCE.
3. ALL CONCRETE WITH SURFACES EXPOSED TO WEATHER OR STANDING WATER SHALL BE AIR-ENTRAINED WITH AN AIR-ENTRAINING AGENT CONFORMING TO ASTM C260, C494, AND C618. TOTAL AIR CONTENT FOR FROST-RESISTANT CONCRETE SHALL BE IN ACCORDANCE WITH TABLE ACI 318 TABLE 4.2.1 MODERATE EXPOSURE.
4. REINFORCING STEEL SHALL CONFORM TO ASTM A615 (INCLUDING SUPPLEMENT S1), GRADE 60, fy=60,000 PSI. EXCEPTIONS: ANY BARS SPECIFICALLY SO NOTED ON THE DRAWINGS SHALL BE GRADE 40, fy=40,000 PSI. WELDED WIRE FABRIC SHALL CONFORM TO ASTM A-185. SPIRAL REINFORCEMENT SHALL BE PLAIN WIRE CONFORMING TO ASTM A615, GRADE 60, fy=60,000 PSI.
5. DETAILING OF REINFORCING STEEL (INCLUDING HOOKS AND BENDS) SHALL BE IN ACCORDANCE WITH ACI 315-99 AND 318-14. LAP ALL REINFORCEMENTS IN ACCORDANCE WITH "THE REINFORCING SPLICE AND DEVELOPMENT LENGTH SCHEDULE." PROVIDE CORNER BARS AT ALL WALL AND FOOTING INTERSECTIONS. LAP ADJACENT MATS OF WELDED WIRE FABRIC A MINIMUM OF 8" AT SIDES AND ENDS.
   NO BARS PARTIALLY EMBEDDED IN HARDENED CONCRETE SHALL BE FIELD BENT UNLESS SPECIFICALLY SO DETAILED OR APPROVED BY THE STRUCTURAL ENGINEER.
6. CONCRETE PROTECTION (COVER) FOR REINFORCING STEEL SHALL BE AS FOLLOWS:

FOOTINGS AND OTHER UNFORMED SURFACES CAST AGAINST AND PERMANENTLY EXPOSED TO EARTH	3"
FORMED SURFACES EXPOSED TO EARTH OR WEATHER (#6 BARS OR LARGER)	2"
FORMED SURFACES EXPOSED TO EARTH OR WEATHER (#5 BARS OR SMALLER)	1-1/2"
COLUMN TIES OR SPIRALS AND BEAM STIRRUPS	1-1/2"
SLABS AND WALLS (INT. FACE)	GREATER OF BAR DIAMETER PLUS 1/8" OR 3/4"

7. CONCRETE WALL REINFORCING - PROVIDE THE FOLLOWING UNLESS DETAILED OTHERWISE:

6" WALLS	#4 @ 16 HORIZ.	#4 @ 18 VERTICAL	1 CURTAIN
8" WALLS	#4 @ 12 HORIZ.	#4 @ 18 VERTICAL	1 CURTAIN

8. CAST-IN-PLACE CONCRETE: SEE ARCHITECTURAL DRAWINGS FOR EXACT LOCATIONS AND DIMENSIONS OF DOOR AND WINDOW OPENINGS IN ALL CONCRETE WALLS. SEE MECHANICAL DRAWINGS FOR SIZE AND LOCATION OF MISCELLANEOUS MECHANICAL OPENINGS THROUGH CONCRETE WALLS. SEE ARCHITECTURAL DRAWINGS FOR ALL GROOVES, NOTCHES, CHAMFERS, FEATURE STRIPS, COLOR, TEXTURE, AND OTHER FINISH DETAILS AT ALL EXPOSED CONCRETE SURFACES, BOTH CAST-IN-PLACE AND PRECAST.
9. NON-SHRINK GROUT SHALL BE FURNISHED BY AN APPROVED MANUFACTURER AND SHALL BE MIXED AND PLACED IN STRICT ACCORDANCE WITH THE MANUFACTURER'S PUBLISHED RECOMMENDATIONS. GROUT STRENGTH SHALL BE AT LEAST EQUAL TO THE MATERIAL ON WHICH IT IS PLACED (3000 PSI MINIMUM).

Anchorage

1. EXPANSION BOLTS INTO CONCRETE AND CONCRETE MASONRY UNITS SHALL BE "KWIK BOLT TZ" AS MANUFACTURED BY THE HILTI CORP., INSTALLED IN STRICT ACCORDANCE WITH ICC-ES REPORT NO. ESR-1917, INCLUDING MINIMUM EMBEDMENT REQUIREMENTS. BOLTS INTO CONCRETE MASONRY OR BRICK MASONRY UNITS SHALL BE INTO FULLY GROUTED CELLS. SUBSTITUTES PROPOSED BY CONTRACTOR SHALL BE SUBMITTED FOR REVIEW WITH ICC REPORTS INDICATING EQUIVALENT OR GREATER LOAD CAPACITIES. SPECIAL INSPECTION IS REQUIRED FOR ALL EXPANSION BOLT INSTALLATION.
   1.1. ALTERNATIVELY, EXPANSION BOLTS INTO CONCRETE AND CONCRETE MASONRY UNITS MAY BE STRONG-BOLT 2 ANCHORS AS MANUFACTURED BY THE SIMPSON STRONG TIE COMPANY AND INSTALLED IN STRICT CONFORMANCE TO ICC-ES REPORT NUMBER ESR-3037, INCLUDING MINIMUM EMBEDMENT REQUIREMENTS. BOLTS INTO CONCRETE MASONRY OR BRICK MASONRY UNITS SHALL BE INTO FULLY GROUTED CELLS. SPECIAL INSPECTION IS REQUIRED FOR ALL EXPANSION BOLT INSTALLATION.
2. EPOXY-GROUTED ITEMS (THREADED RODS OR REINFORCING BAR) SPECIFIED ON THE DRAWINGS SHALL BE INSTALLED USING "HIT RE 500-V3" AS MANUFACTURED BY HILTI CORP. INSTALL IN STRICT ACCORDANCE WITH ICC-ES REPORT NO. ESR-2322. SPECIAL INSPECTION OF INSTALLATION IS REQUIRED. RODS SHALL BE ASTM A-36 UNLESS OTHERWISE NOTED.
   2.1. ALTERNATIVELY, EPOXY-GROUTED ITEMS (THREADED RODS OR REINFORCING BAR) SPECIFIED ON THE DRAWINGS MAY BE INSTALLED USING "SET-3G" HIGH STRENGTH EPOXY AS MANUFACTURED BY THE SIMPSON STRONG TIE COMPANY. INSTALL IN STRICT ACCORDANCE WITH ICC-ES REPORT NO. ESR-4057. SPECIAL INSPECTION OF INSTALLATION IS REQUIRED. RODS SHALL BE ASTM A-36 UNLESS OTHERWISE NOTED.

Steel

1. STRUCTURAL STEEL DESIGN, FABRICATION, AND ERECTION SHALL BE BASED ON:
   A. EITHER AISC 360 AND SECTION 2205.2 OF THE INTERNATIONAL BUILDING CODE.
   B. MARCH 18, 2005 AISC CODE OF STANDARD PRACTICE FOR STEEL BUILDINGS AND BRIDGES, AMENDED AS FOLLOWS.
      i) AS NOTED IN THE CONTRACT DOCUMENTS.
      ii) BY THE DELETION OF PARAGRAPH 4.4.1.
      iii) REVISE REFERENCE FROM "STRUCTURAL DESIGN DRAWINGS" TO "CONTRACT DOCUMENTS" IN PARAGRAPH 3.1.
2. SPECIFICATION FOR STRUCTURAL JOINTS USING ASTM A325 OR A490 BOLTS.
   STRUCTURAL STEEL SHALL CONFORM TO THE FOLLOWING REQUIREMENTS:

TYPE OF MEMBER	ASTM SPECIFICATION	Fy
WIDE FLANGE SHAPES	A992	50 KSI
OTHER SHAPES, PLATES, AND RODS	A36	36 KSI
PIPE COLUMNS	A53 (E OR S, GR.B)	35 KSI
STRUCTURAL TUBING	A500 (GRADE B)	
SQUARE OR RECTANGULAR		46 KSI
CONNECTION BOLTS (3/4" ROUND, UNLESS SHOWN OTHERWISE)	A325-N	

3. ARCHITECTURALLY EXPOSED STRUCTURAL STEEL SHALL CONFORM TO SECTION 10 OF THE AISC CODE OF STANDARD PRACTICE FOR STEEL BUILDINGS AND BRIDGES.
4. ALL A-325N CONNECTION BOLTS NEED ONLY BE TIGHTENED TO A SNUG TIGHT CONDITION, DEFINED AS THE TIGHTNESS THAT EXISTS WHEN ALL PLIES IN A JOINT ARE IN FIRM CONTACT. THIS MAY BE ATTAINED BY A FEW IMPACTS OF AN IMPACT WRENCH OR THE FULL EFFORT OF AN IRONWORKER USING AN ORDINARY SPUD WRENCH.
5. ALL ANCHORS EMBEDDED IN MASONRY OR CONCRETE SHALL BE A307 HEADED BOLTS OR A36 THREADED ROD WITH AN ASTM 563 HEAVY HEX NUT TACK WELDED ON THE EMBEDDED END.
6. ALL WELDING SHALL BE IN CONFORMANCE WITH A.I.S.C. AND A.W.S. STANDARDS AND SHALL BE PERFORMED BY W.A.B.O. CERTIFIED WELDERS USING E70 XX ELECTRODES. ONLY PREQUALIFIED WELDS (AS DEFINED BY A.W.S.) SHALL BE USED. ALL COMPLETE JOINT PENETRATION GROOVE WELDS SHALL BE MADE WITH A FILLER MATERIAL THAT HAS A MINIMUM CVN TOUGHNESS OF 20 FT-LBS AT -20 DEGREES F AND 40 FT-LBS AT 70 DEGREES F, AS DETERMINED BY AWS CLASSIFICATION OR MANUFACTURER CERTIFICATION.

Wood

1. FRAMING LUMBER SHALL BE KILN DRIED OR MC-19, AND GRADED AND MARKED IN CONFORMANCE WITH W.C.L.B. STANDARD GRADING RULES FOR WEST COAST LUMBER NO.17. FURNISH TO THE FOLLOWING MINIMUM STANDARDS:

JOISTS AND BEAMS:	(2X & 3X MEMBERS)	DOUGLAS FIR-LARCH NO. 2 MINIMUM BASE VALUE, Fb=900 PSI
	(4X MEMBERS)	DOUGLAS FIR-LARCH NO. 2 MINIMUM BASE VALUE, Fb=900 PSI
BEAMS:	(INCL. 6X AND LARGER)	DOUGLAS FIR-LARCH NO. 1 MINIMUM BASE VALUE, Fb=1350 PSI
POSTS:	(4X MEMBERS)	DOUGLAS FIR-LARCH NO. 2 MINIMUM BASE VALUE, Fc=1350 PSI
	(6X AND LARGER)	DOUGLAS FIR-LARCH NO. 1 MINIMUM BASE VALUE, Fc=1000 PSI
STUDS, PLATES & MISC. FRAMING:		DOUGLAS-FIR-LARCH NO. 2

2. GLUED LAMINATED MEMBERS SHALL BE FABRICATED IN CONFORMANCE WITH ASTM AND AITC STANDARDS. EACH MEMBER SHALL BEAR AN A.I.T.C. IDENTIFICATION MARK AND SHALL BE ACCOMPANIED BY AN A.I.T.C. CERTIFICATE OF CONFORMANCE. ALL SIMPLE SPAN BEAMS SHALL BE DOUGLAS FIR COMBINATION 24F-V4, Fb=2,400 PSI, Fv=265 PSI. ALL CANTILEVERED BEAMS SHALL BE DOUGLAS FIR COMBINATION 24F-V8, Fb=2400 PSI, Fv=265 PSI. CAMBER ALL SIMPLE SPAN GLULAM BEAMS TO 3,000' RADIUS, UNLESS SHOWN OTHERWISE ON THE PLANS.
3. MANUFACTURED LUMBER, PSL, LVL, AND LSL, SHALL BE MANUFACTURED UNDER A PROCESS APPROVED BY THE NATIONAL RESEARCH BOARD. EACH PIECE SHALL BEAR A STAMP OR STAMPS NOTING THE NAME AND PLANT NUMBER OF THE MANUFACTURER, THE GRADE, THE NATIONAL RESEARCH BOARD NUMBER, AND THE QUALITY CONTROL AGENCY. ALL PSL, LVL, AND LSL LUMBER SHALL BE MANUFACTURED IN ACCORDANCE WITH ICC-ES REPORT ESR-1387 USING DOUGLAS FIR VENEER GLUED WITH A WATERPROOF ADHESIVE MEETING THE REQUIREMENTS OF ASTM D2559 WITH ALL GRAIN PARALLEL WITH THE LENGTH OF THE MEMBER. THE MEMBERS SHALL HAVE THE FOLLOWING MINIMUM PROPERTIES:

PSL (2.0E)	Fb=2900 PSI, E=2000 KSI, Fv=290 PSI
LVL (1.9E)	Fb=2600 PSI ,E=1900 KSI, Fv=285 PSI
LSL (1.55E)	Fb=2325 PSI ,E=1550 KSI, Fv=310 PSI

   DESIGN SHOWN ON PLANS IS BASED ON LUMBER MANUFACTURED BY THE WEYERHAEUSER CORPORATION. ALTERNATE MANUFACTURERS MAY BE USED SUBJECT TO REVIEW AND APPROVAL BY THE ARCHITECT AND STRUCTURAL ENGINEER, ALTERNATE JOIST HANGERS AND OTHER HARDWARE MAY BE SUBSTITUTED FOR ITEMS SHOWN PROVIDED THEY HAVE ICC APPROVAL FOR EQUAL OR GREATER LOAD CAPACITIES. ALL JOIST HANGERS AND OTHER HARDWARE SHALL BE COMPATIBLE IN SIZE WITH MEMBERS PROVIDED.
   MANUFACTURED LUMBER PRODUCTS SHALL BE INSTALLED WITH A MOISTURE CONTENT OF 12% OR LESS. THE CONTRACTOR SHALL MAKE PROVISIONS DURING CONSTRUCTION TO PREVENT THE MOISTURE CONTENT OF INSTALLED BEAMS FROM EXCEEDING 12%. EXCESSIVE DEFLECTIONS MAY OCCUR IF MOISTURE CONTENT EXCEEDS THIS VALUE.

Wood (Con't)

4. PREFABRICATED OPEN WEB WOOD TRUSSES (OR COMBINATION WOOD AND METAL) SHALL BE DESIGNED BY THE MANUFACTURER FOR THE SPANS AND CONDITIONS SHOWN ON THE PLANS AND SHALL BE FURNISHED AND INSTALLED IN CONFORMANCE WITH THE MANUFACTURER'S PUBLISHED SPECIFICATIONS. ALL NECESSARY BRIDGING, BLOCKING,PRE-NOTCHED PLATES, ETC., SHALL BE DETAILED AND FURNISHED BY THE MANUFACTURER. SUBMIT SHOP DRAWINGS AND DESIGN CALCULATIONS (COMPLETE WITH STRESS DIAGRAMS) TO THE ARCHITECT AND STRUCTURAL ENGINEER FOR REVIEW PRIOR TO FABRICATION. DESIGN SUBMITTALS SHALL BEAR THE STAMP AND SIGNATURE OF A REGISTERED PROFESSIONAL ENGINEER, STATE OF WASHINGTON. PERMANENT AND TEMPORARY BRIDGING SHALL BE INSTALLED IN CONFORMANCE WITH MANUFACTURER'S SPECIFICATIONS.
5. PLYWOOD SHEATHING SHALL BE GRADE C-D, EXTERIOR GLUE OR STRUCTURAL II, EXTERIOR GLUE IN CONFORMANCE WITH DOC PS 1. ORIENTED STRAND BOARD OF EQUIVALENT THICKNESS, EXPOSURE RATING AND PANEL INDEX MAY BE USED IN LIEU OF PLYWOOD.
   A. ROOF SHEATHING SHALL BE 1/2" (NOMINAL) WITH SPAN RATING 32/16.
   B. FLOOR SHEATHING SHALL BE 3/4" (NOMINAL) WITH SPAN RATING 48/24.
   C. WALL SHEATHING SHALL BE 1/2" (NOMINAL) WITH SPAN RATING 24/0.
   D. REFER TO WOOD FRAMING NOTES BELOW FOR TYPICAL NAILING REQUIREMENTS.
6. ALL WOOD IN DIRECT CONTACT WITH CONCRETE OR MASONRY SHALL BE PRESSURE-TREATED WITH AN APPROVED PRESERVATIVE OR (2) LAYERS OF ASPHALT IMPREGNATED BUILDING PAPER SHALL BE PROVIDED BETWEEN UNTREATED WOOD AND CONCRETE OR MASONRY.
7. PRESSURE TREATED WOOD SHALL BE TREATED PER AWPA STANDARD. PRESSURE TREATED WOOD FOR ABOVE GROUND USE SHALL BE TREATED TO A RETENTION OF 0.25 PCF. WOOD IN CONTINUOUS CONTACT WITH FRESH WATER OR SOIL SHALL BE TREATED TO A RETENTION OF 0.40 PCF. WOOD FOR USE IN PERMANENT FOUNDATIONS SHALL BE TREATED TO A RETENTION OF 0.60 PCF. SODIUM BORATE (SBX) TREATED WOOD SHALL NOT BE USED WHERE EXPOSED TO WEATHER. FASTENERS AND TIMBER CONNECTORS IN DIRECT CONTACT WITH ACQ-A, CBA-A, CA-B, OR SBX TREATED WOOD SHALL BE G185 OR A185 HOT DIPPED OR CONTINUOUS HOT-GALVANIZED PER ASTM A653. FASTENERS AND TIMBER CONNECTORS IN DIRECT CONTACT WITH ACZA TREATED WOOD SHALL BE TYPE 304 OR 316 STAINLESS STEEL.
8. TIMBER CONNECTORS CALLED OUT BY LETTERS AND NUMBERS SHALL BE "STRONG-TIE" BY SIMPSON COMPANY, AS SPECIFIED IN THEIR CATALOG NUMBER C-C-2015. EQUIVALENT DEVICES BY OTHER MANUFACTURERS MAY BE SUBSTITUTED, PROVIDED THEY HAVE ICC-ES APPROVAL FOR EQUAL OR GREATER LOAD CAPACITIES. PROVIDE NUMBER AND SIZE OF FASTENERS AS SPECIFIED BY MANUFACTURER. CONNECTORS SHALL BE INSTALLED IN ACCORDANCE WITH THE MANUFACTURER'S RECOMMENDATIONS.
   ALL 2X JOISTS SHALL BE CONNECTED TO FLUSH BEAMS WITH "LUS" SERIES JOIST HANGERS. ALL TJI JOISTS SHALL BE CONNECTED TO FLUSH BEAMS WITH "IUS" SERIES JOIST HANGERS. ALL DOUBLE-JOIST BEAMS SHALL BE CONNECTED TO FLUSH BEAMS WITH "MIT" SERIES JOIST HANGERS.
   WHERE CONNECTOR STRAPS CONNECT TWO MEMBERS, PLACE ONE-HALF OF THE NAILS OR BOLTS IN EACH MEMBER.
   ALL SHIMS SHALL BE SEASONED AND DRIED AND THE SAME GRADE (MINIMUM) AS MEMBERS CONNECTED.
9. WOOD FASTENERS
   A. NAIL SIZES SPECIFIED ON DRAWINGS ARE BASED ON THE FOLLOWING SPECIFICATIONS:

SIZE	LENGTH	DIAMETER
8d	2-1/2"	0.131"
10d	3"	0.148"
16d BOX	3-1/2"	0.135"

   IF CONTRACTOR PROPOSES THE USE OF ALTERNATE NAILS, THEY SHALL SUBMIT NAIL SPECIFICATIONS TO THE STRUCTURAL ENGINEER (PRIOR TO CONSTRUCTION) FOR REVIEW AND APPROVAL.
   NAILS - PLYWOOD (APA RATED SHEATHING) FASTENERS TO FRAMING SHALL BE DRIVEN FLUSH TO FACE OF SHEATHING WITH NO COUNTERSINKING PERMITTED.
   B. ALL BOLTS IN WOOD MEMBERS SHALL CONFORM TO ASTM A307. PROVIDE WASHERS UNDER THE HEADS AND NUTS OF ALL BOLTS AND LAG BOLTS BEARING ON WOOD. INSTALLATION OF LAG BOLTS SHALL CONFORM TO THE NATIONAL DESIGN SPECIFICATION FOR WOOD CONSTRUCTION (2005 EDITION) WITH A LEAD BORE HOLE OF 60 TO 70 PERCENT OF THE SHANK DIAMETER. LEAD HOLES ARE NOT REQUIRED FOR 3/8" AND SMALLER LAG SCREWS.
10. WOOD FRAMING NOTES--THE FOLLOWING APPLY UNLESS OTHERWISE SHOWN ON THE PLANS:
   A. ALL WOOD FRAMING DETAILS NOT SHOWN OTHERWISE SHALL BE CONSTRUCTED TO THE MINIMUM STANDARDS OF THE INTERNATIONAL BUILDING CODE. MINIMUM NAILING, UNLESS OTHERWISE NOTED, SHALL CONFORM TO TABLE 2304.10.1. COORDINATE THE SIZE AND LOCATION OF ALL OPENINGS WITH MECHANICAL AND ARCHITECTURAL DRAWINGS.
   B. WALL FRAMING: REFER ARCHITECTURAL DRAWINGS FOR THE SIZE OF ALL WALLS. ALL STUDS SHALL BE SPACED AT 16" O.C. UNO. TWO STUDS MINIMUM SHALL BE PROVIDED AT THE END OF ALL WALLS AND AT EACH SIDE OF ALL OPENINGS, AND AT BEAM OR HEADER BEARING LOCATIONS. TWO 2x8 HEADERS SHALL BE PROVIDED OVER ALL OPENINGS NOT OTHERWISE NOTED. SOLID BLOCKING FOR WOOD COLUMNS SHALL BE PROVIDED THROUGH FLOORS TO SUPPORTS BELOW. PROVIDE CONTINUOUS SOLID BLOCKING AT MID-HEIGHT OF ALL STUD WALLS OVER 10'-0" IN HEIGHT.
   ALL WALLS SHALL HAVE A SINGLE BOTTOM PLATE AND A DOUBLE TOP PLATE. END NAIL TOP PLATE TO EACH STUD WITH TWO 16d NAILS, AND TOENAIL OR END NAIL EACH STUD TO BOTTOM PLATE WITH TWO 16d NAILS. FACE NAIL DOUBLE TOP PLATE WITH 16d @ 12" O.C. AND LAP MINIMUM 4'-0" AT JOINTS AND PROVIDE EIGHT 16d NAILS @ 4" O.C. EACH SIDE JOINT.
   ALL STUD WALLS SHALL HAVE THEIR LOWER WOOD PLATES ATTACHED TO WOOD FRAMING BELOW WITH TWO ROWS OF 16d NAILS @ 12" ON-CENTER, OR ATTACHED TO CONCRETE BELOW WITH 5/8" DIAMETER ANCHOR BOLTS @ 4'-0" ON-CENTER EMBEDDED 7" MINIMUM, UNLESS INDICATED OTHERWISE. INDIVIDUAL MEMBERS OF BUILT-UP POSTS SHALL BE NAILED TO EACH OTHER WITH TWO ROWS OF 16d @12" ON-CENTER. UNLESS OTHERWISE NOTED, GYPSUM WALLBOARD SHALL BE FASTENED TO THE INTERIOR SURFACE OF ALL STUDS AND PLATES WITH NO. 6 X 1-1/4" TYPE S OR W SCREWS @ 8" ON-CENTER. UNLESS INDICATED OTHERWISE, 1/2" (NOMINAL) APA RATED SHEATHING (SPAN RATING 24/0) SHALL BE NAILED TO ALL EXTERIOR SURFACES WITH 8d NAILS @ 6" ON-CENTER AT PANEL EDGES AND TOP AND BOTTOM PLATES (BLOCK UN-SUPPORTED EDGES) AND TO ALL INTERMEDIATE STUDS AND BLOCKING WITH 8d NAILS @ 12" ON-CENTER ALLOW 1/8" SPACING AT ALL PANEL EDGES AND PANEL ENDS.
   C. FLOOR AND ROOF FRAMING: PROVIDE DOUBLE JOISTS UNDER ALL PARALLEL PARTITIONS THAT EXTEND OVER MORE THAN HALF THE JOIST LENGTH AND AROUND ALL OPENINGS IN FLOORS OR ROOFS UNLESS OTHERWISE NOTED. PROVIDE SOLID BLOCKING AT ALL BEARING POINTS. TOENAIL JOISTS TO SUPPORTS WITH TWO 16d NAILS. ATTACH TIMBER JOISTS TO FLUSH HEADERS OR BEAMS WITH SIMPSON METAL JOIST HANGERS IN ACCORDANCE WITH NOTES ABOVE. NAIL ALL MULTI-JOIST BEAMS TOGETHER WITH TWO ROWS 16d @ 12" ON-CENTER.
   UNLESS OTHERWISE NOTED ON THE PLANS, PLYWOOD ROOF AND FLOOR SHEATHING SHALL BE LAID UP WITH GRAIN PERPENDICULAR TO SUPPORTS AND NAILED AT 6" ON-CENTER WITH 8d NAILS TO FRAMED PANEL EDGES, STRUTS AND OVER STUD WALLS AS SHOWN ON PLANS AND @ 12" ON-CENTER TO INTERMEDIATE SUPPORTS. PROVIDE APPROVED PLYWOOD EDGE CLIPS CENTERED BETWEEN JOISTS/TRUSSES AT UNBLOCKED ROOF SHEATHING EDGES. ALL FLOOR SHEATHING EDGES SHALL HAVE APPROVED T&G JOINTS OR SHALL BE SUPPORTED WITH SOLID BLOCKING. ALLOW 1/8" SPACING AT ALL PANEL EDGES AND ENDS OF FLOOR AND ROOF SHEATHING. TOENAIL BLOCKING TO SUPPORTS WITH 16d @ 12" ON-CENTER UNLESS OTHERWISE NOTED.

buker ENGINEERING LLC
4303 Stone Way N
Seattle, WA 98103
206.258.6333

DANIEL R. BUKER — STATE OF WASHINGTON — 44090 — STRUCTURAL ENGINEER — PROFESSIONAL ENGINEER

Zimmer Residence
4661 Forest Ave SE
Mercer Island, WA, 98040

No.	Date	Issue
	11/13/24	Permit
	4/2/25	Corrections
	4/17/25	Revisions
1	5/7/25	Corrections
2	6/2/25	Corrections

Sheet Contents

General Structural Notes

Sheet No.

S1.1

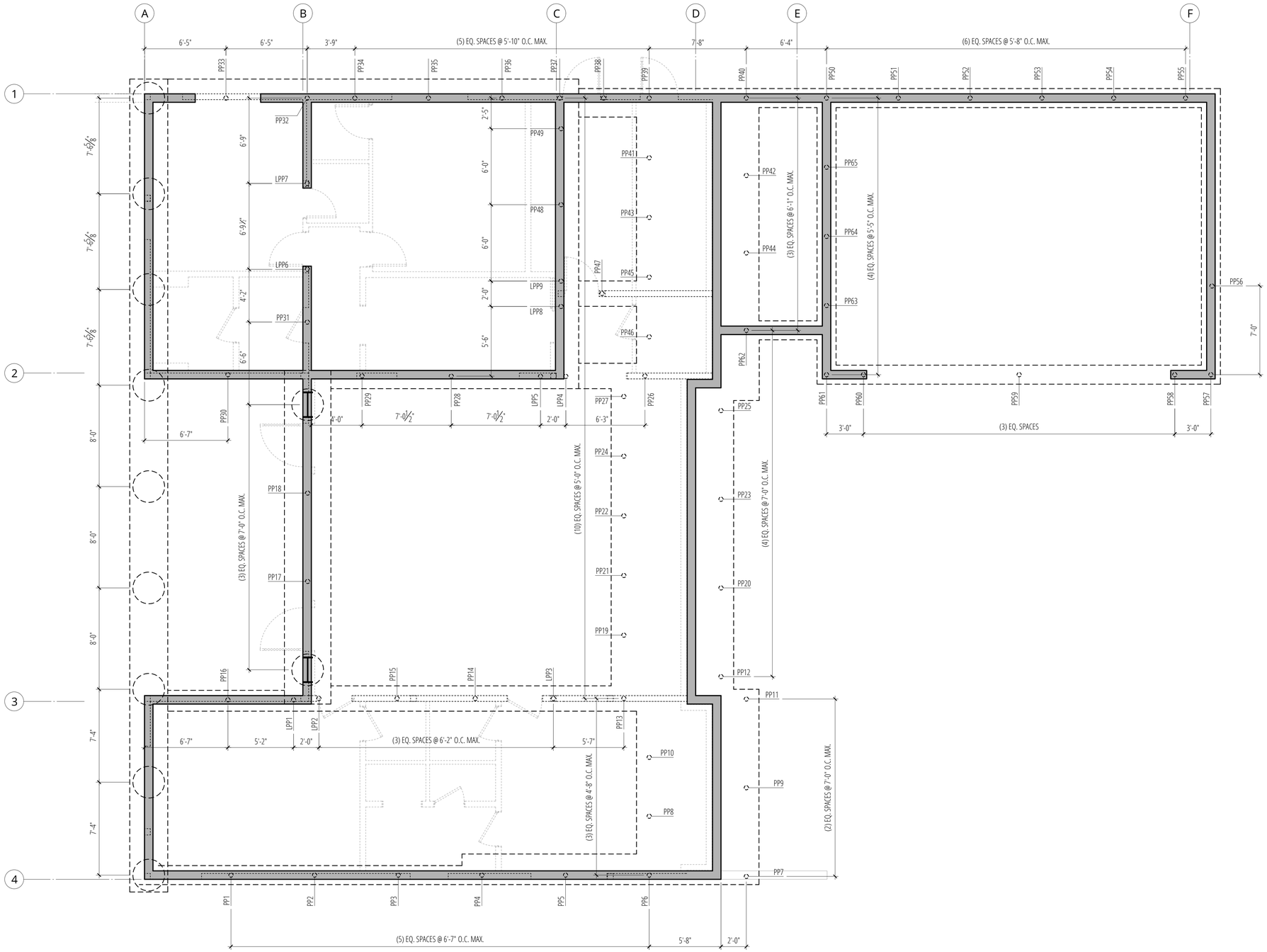

LEGEND

- (N) CONCRETE WALL ABOVE THIS LEVEL
- (N) CONCRETE FOOTING
- PIPE PILE PER SCHEDULE

PLAN NOTES

PIPE PILE SCHEDULE

PP1 - PP65	3" ø STD PIPE
LPP1 - LPP9	4" ø STD PIPE

1. PIPE PILES SHALL BE DRIVEN TO REFUSAL & INSPECTED PER GENERAL NOTES
2. PILES SHALL BE CAPPED w/ MIN. ⅜ STL. PL & EMBED 3" MIN - 6" MAX IN CONCRETE FOUNDATIONS (18" MIN. OF CONCRETE COVER OVER PILE CAP)
3. EXTENT OF PIPE PILE SUPPORT IS APPROXIMATE & SHALL BE VERIFIED BY GEOTECHNICAL ENGINEER IN FIELD. IF ADDITIONAL/LESS PILES ARE REQ'D, COORDINATE REVISIONS w/ ENGINEER OF RECORD.

Pin Pile Plan

SCALE: ¼"=1'-0"

buker ENGINEERING LLC
4303 Stone Way N
Seattle, WA 98103
206.258.6333

DANIEL R. BUKER
STATE OF WASHINGTON
44090
STRUCTURAL ENGINEER
PROFESSIONAL ENGINEER

Zimmer Residence

4661 Forest Ave SE
Mercer Island, WA, 98040

No.	Date	Issue
	11/13/24	Permit
	4/2/25	Corrections
	4/17/25	Revisions
1	5/7/25	Corrections
2	6/2/25	Corrections

Sheet Contents

###############

Sheet No.

S2.0

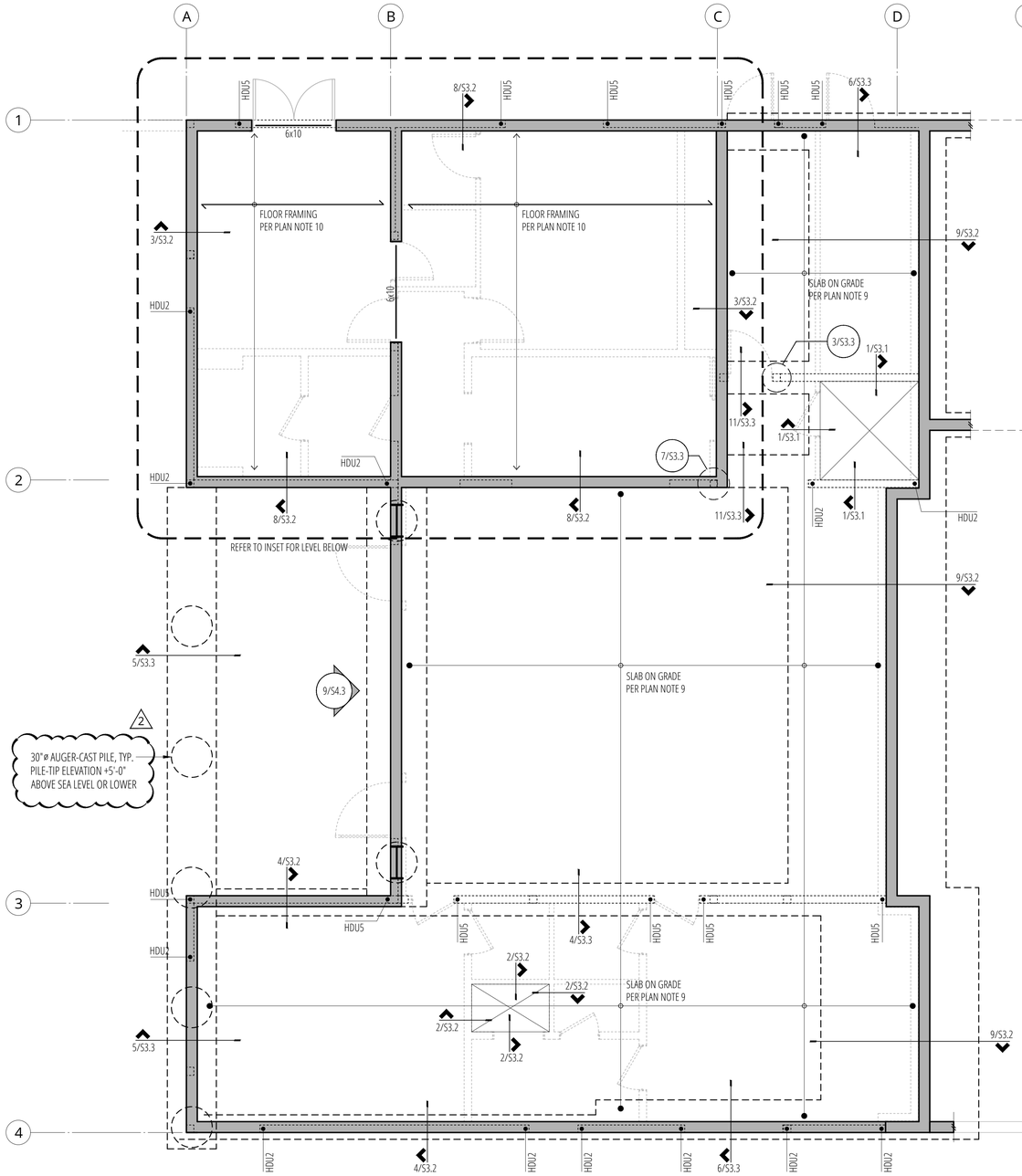

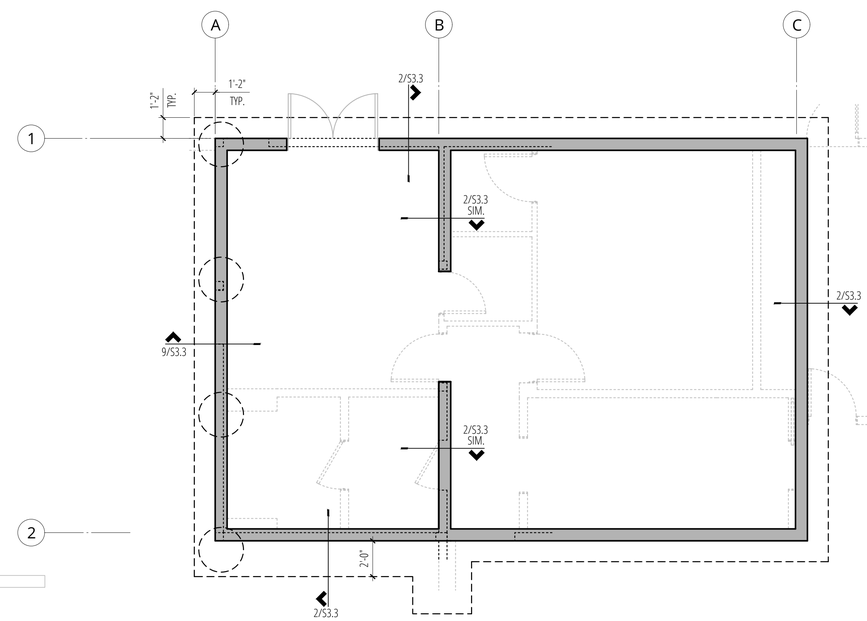

Sub-Basement Foundation Plan

SCALE: ¼"=1'-0"

PLAN NOTES

1. REFER TO GENERAL STRUCTURAL NOTES FOR ADDITIONAL REQUIREMENTS (S1.1).
2. REFER TO ARCHITECTURAL DRAWINGS FOR ALL DIMENSIONS UNLESS SPECIFICALLY NOTED ON STRUCTURAL PLANS.
3. ALL FOOTINGS SHALL BEAR ON FIRM, NATIVE SOIL.
4. PROVIDE DRAINAGE BEHIND ALL FOUNDATION WALLS.
5. REINFORCE FOOTING AND WALL CORNERS AND INTERSECTIONS PER 11/S3.1.
6. "HDUx" REFERS TO HOLDOWNS PER 9/S3.1.
7. REFER 4/S3.1 WHERE PIPES PENETRATE FOUNDATION.
8. CONTRACTOR TO VERIFY TOP OF FOOTING ELEVATION w/ ARCHITECTURAL PLANS.
9. 4" CONCRETE SLAB ON GRADE REINFORCED WITH #3 @ 12" OC EACH WAY, CENTERED IN SLAB. PROVIDE A BASE OF 12" COMPACTED, CLEAN ¾" MINUS GRAVEL COVERED WITH 6 MIL. VAPOR BARRIER. PROVIDE JOINTS PER 7/S3.1.
10. FLOOR FRAMING AT SUB-BASEMENT TO BE 14" FLOOR TRUSSES @ 16" O.C. TRUSS DESIGN BY OTHERS
11. FLOOR SHEATHING SHALL BE 1⅛" T&G PLYWOOD SHEATHING WITH 48/24 SPAN RATING. NAIL FRAMED PANEL EDGES w/ 8d COMMON (0.131" DIA. x 2½") @ 6" O.C., FIELD @ 12" O.C. (REFER TO 9/S4.1)
12. CONTRACTOR TO COORDINATE WHERE SITE CONDITIONS REQUIRE FOOTING TO STEP. (REFER TO DETAIL 2/S3.1)

LEGEND

- (N) CONCRETE WALL ABOVE THIS LEVEL
- (N) CONCRETE FOOTING
- STRUCTURAL WOOD WALL or POST ABOVE THIS LEVEL
- SPAN DIRECTION
- EXTENT OF SPAN
- HD — HOLDOWN

Foundation Plan

SCALE: ¼"=1'-0"

buker ENGINEERING LLC
4303 Stone Way N
Seattle, WA 98103
206.258.6333

DANIEL R. BUKER
STATE OF WASHINGTON
44090
STRUCTURAL ENGINEER
PROFESSIONAL ENGINEER

Zimmer Residence

4661 Forest Ave SE
Mercer Island, WA, 98040

No.	Date	Issue
	11/13/24	Permit
	4/2/25	Corrections
	4/17/25	Revisions
1	5/7/25	Corrections
2	6/2/25	Corrections

Sheet Contents

###############

Sheet No.

S2.1

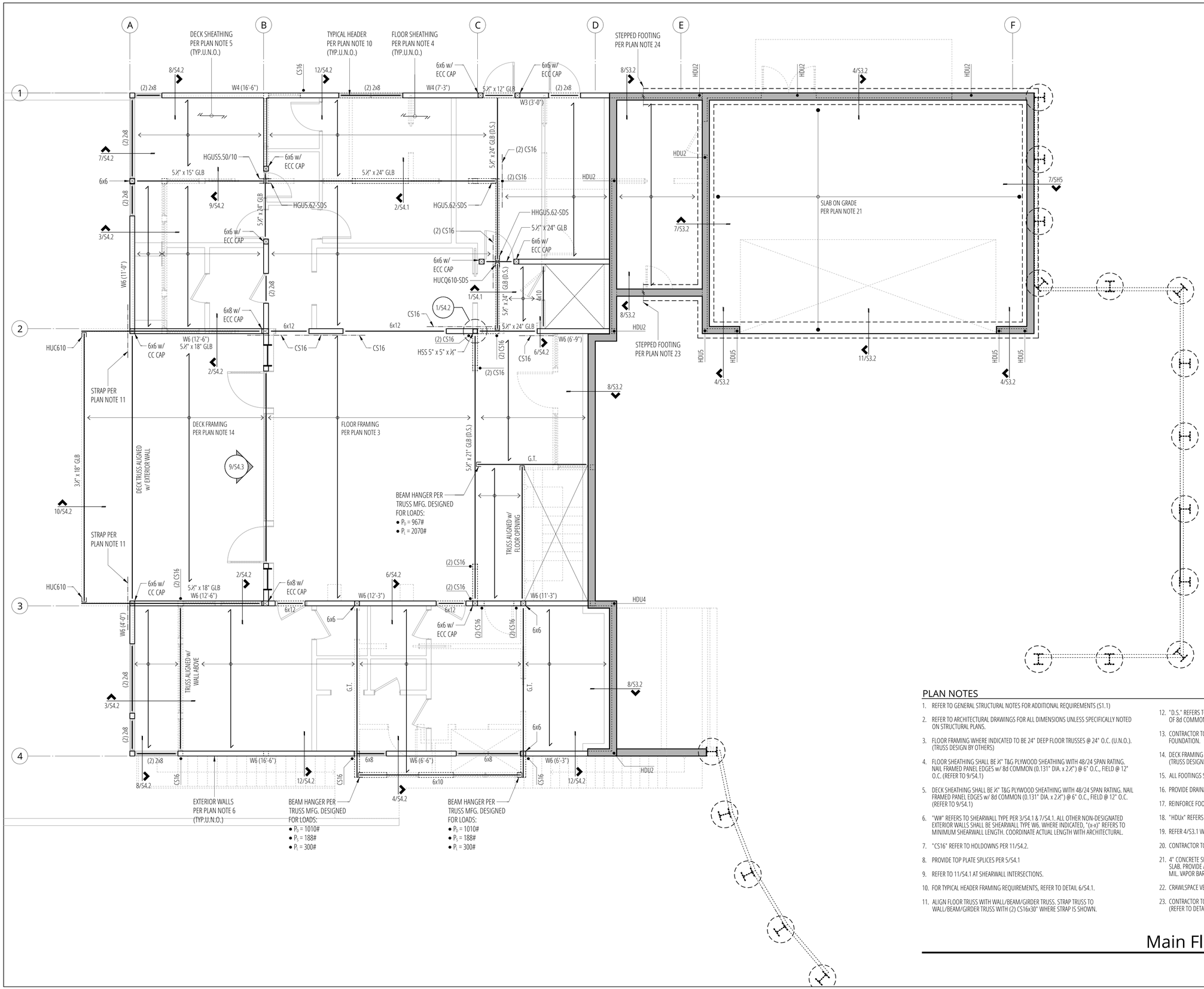

LEGEND

- STRUCTURAL WOOD WALL or POST BELOW THIS LEVEL
- STRUCTURAL WOOD WALL or POST ABOVE THIS LEVEL
- (N) CONCRETE WALL ABOVE THIS LEVEL
- (N) CONCRETE FOOTING
- SPAN DIRECTION
- EXTENT OF SPAN
- JOIST or BEAM
- HD — HOLDOWN
- STRAP PER PLAN NOTE 14
- G.T. — GIRDER TRUSS

PLAN NOTES

1. REFER TO GENERAL STRUCTURAL NOTES FOR ADDITIONAL REQUIREMENTS (S1.1)
2. REFER TO ARCHITECTURAL DRAWINGS FOR ALL DIMENSIONS UNLESS SPECIFICALLY NOTED ON STRUCTURAL PLANS.
3. FLOOR FRAMING WHERE INDICATED TO BE 24" DEEP FLOOR TRUSSES @ 24" O.C. (U.N.O.). (TRUSS DESIGN BY OTHERS)
4. FLOOR SHEATHING SHALL BE ¾" T&G PLYWOOD SHEATHING WITH 48/24 SPAN RATING. NAIL FRAMED PANEL EDGES w/ 8d COMMON (0.131" DIA. x 2½") @ 6" O.C., FIELD @ 12" O.C. (REFER TO 9/S4.1)
5. DECK SHEATHING SHALL BE ¾" T&G PLYWOOD SHEATHING WITH 48/24 SPAN RATING. NAIL FRAMED PANEL EDGES w/ 8d COMMON (0.131" DIA. x 2½") @ 6" O.C., FIELD @ 12" O.C. (REFER TO 9/S4.1)
6. "W#" REFERS TO SHEARWALL TYPE PER 3/S4.1 & 7/S4.1. ALL OTHER NON-DESIGNATED EXTERIOR WALLS SHALL BE SHEARWALL TYPE W6. WHERE INDICATED, "(x-x)" REFERS TO MINIMUM SHEARWALL LENGTH. COORDINATE ACTUAL LENGTH WITH ARCHITECTURAL.
7. "CS16" REFER TO HOLDOWNS PER 11/S4.2.
8. PROVIDE TOP PLATE SPLICES PER 5/S4.1
9. REFER TO 11/S4.1 AT SHEARWALL INTERSECTIONS.
10. FOR TYPICAL HEADER FRAMING REQUIREMENTS, REFER TO DETAIL 6/S4.1.
11. ALIGN FLOOR TRUSS WITH WALL/BEAM/GIRDER TRUSS. STRAP TRUSS TO WALL/BEAM/GIRDER TRUSS WITH (2) CS16x30" WHERE STRAP IS SHOWN.
12. "D.S." REFERS TO DRAG STRUT. NAIL FLOOR SHEATHING TO DRAG STRUT WITH (2) ROWS OF 8d COMMON (0.131" DIA. x 2½") @ 4" O.C.
13. CONTRACTOR TO VERIFY THAT ALL POSTS HAVE CONTINUOUS BEARING THROUGH TO THE FOUNDATION.
14. DECK FRAMING WHERE INDICATED TO BE 18" DEEP FLOOR TRUSSES @ 24" O.C. (U.N.O.). (TRUSS DESIGN BY OTHERS)
15. ALL FOOTINGS SHALL BEAR ON FIRM, NATIVE SOIL.
16. PROVIDE DRAINAGE BEHIND ALL FOUNDATION WALLS.
17. REINFORCE FOOTING AND WALL CORNERS AND INTERSECTIONS PER 11/S3.1.
18. "HDUx" REFERS TO HOLDOWNS PER 9/S3.1.
19. REFER 4/S3.1 WHERE PIPES PENETRATE FOUNDATION.
20. CONTRACTOR TO VERIFY TOP OF FOOTING ELEVATION w/ ARCHITECTURAL PLANS.
21. 4" CONCRETE SLAB ON GRADE REINFORCED WITH #3 @ 12" OC EACH WAY, CENTERED IN SLAB. PROVIDE A BASE OF 12" COMPACTED, CLEAN ¾" MINUS GRAVEL COVERED WITH 6 MIL. VAPOR BARRIER. PROVIDE JOINTS PER 7/S3.1.
22. CRAWLSPACE VENTILATION SHALL BE PROVIDED PER ARCH.
23. CONTRACTOR TO COORDINATE WHERE SITE CONDITIONS REQUIRE FOOTING TO STEP. (REFER TO DETAIL 2/S3.1)

Main Floor Framing Plan

SCALE: ¼"=1'-0"

buker ENGINEERING LLC
4303 Stone Way N
Seattle, WA 98103
206.258.6333

DANIEL R. BUKER — STATE OF WASHINGTON — 44090 — STRUCTURAL ENGINEER — PROFESSIONAL ENGINEER

Zimmer Residence

4661 Forest Ave SE
Mercer Island, WA, 98040

No.	Date	Issue
	11/13/24	Permit
	4/2/25	Corrections
	4/17/25	Revisions
1	5/7/25	Corrections
2	6/2/25	Corrections

Sheet Contents

MAIN FLOOR FRAMING PLAN

Sheet No.

S2.2

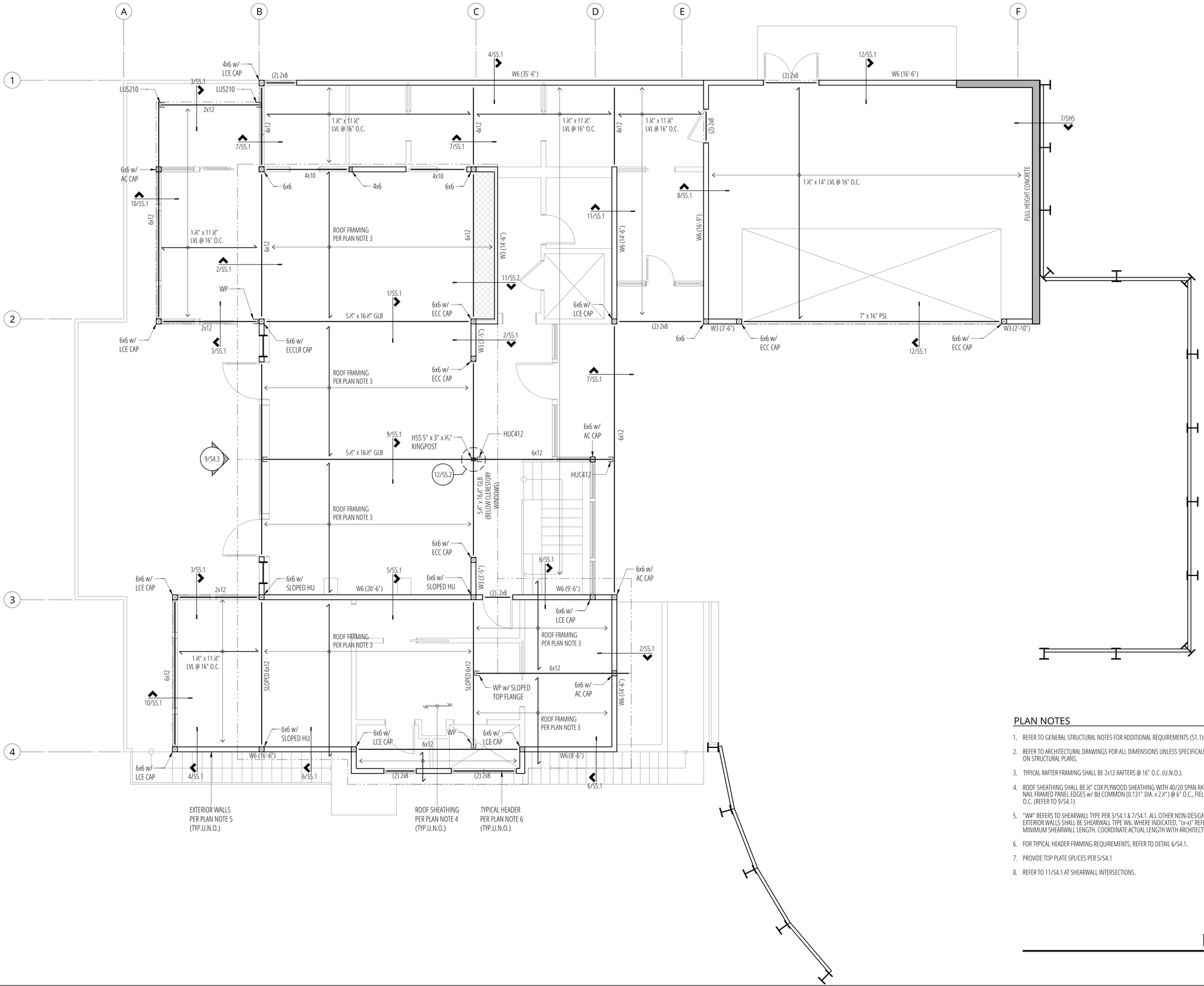

PLAN NOTES

1. REFER TO GENERAL STRUCTURAL NOTES FOR ADDITIONAL REQUIREMENTS (S1.1)
2. REFER TO ARCHITECTURAL DRAWINGS FOR ALL DIMENSIONS UNLESS SPECIFICALLY NOTED ON STRUCTURAL PLANS.
3. TYPICAL RAFTER FRAMING SHALL BE 2x12 RAFTERS @ 16" O.C. (U.N.O.).
4. ROOF SHEATHING SHALL BE ⅜" CDX PLYWOOD SHEATHING WITH 40/20 SPAN RATING, NAIL FRAMED PANEL EDGES w/ 8d COMMON (0.131" DIA. x 2½") @ 6" O.C., FIELD @ 12" O.C. (REFER TO 9/S4.1)
5. "W#" REFERS TO SHEARWALL TYPE PER 3/S4.1 & 7/S4.1. ALL OTHER NON-DESIGNATED EXTERIOR WALLS SHALL BE SHEARWALL TYPE W6. WHERE INDICATED, "(x-x)" REFERS TO MINIMUM SHEARWALL LENGTH. COORDINATE ACTUAL LENGTH WITH ARCHITECTURAL.
6. FOR TYPICAL HEADER FRAMING REQUIREMENTS, REFER TO DETAIL 6/S4.1.
7. PROVIDE TOP PLATE SPLICES PER 5/S4.1
8. REFER TO 11/S4.1 AT SHEARWALL INTERSECTIONS.

LEGEND

- STRUCTURAL WOOD WALL or POST BELOW THIS LEVEL
- STRUCTURAL WOOD WALL or POST ABOVE THIS LEVEL
- SPAN DIRECTION
- EXTENT OF SPAN
- ROOFLINE
- JOIST or BEAM
- BLOCK DIAPH. 2x's LAID FLAT @ ALL PANEL EDGES. 8d @ 4"O.C. @ ALL PANEL EDGES & 12"O.C. IN FIELD. (REFER TO 9/S4.1)

Roof Framing Plan

SCALE: ¼"=1'-0"

buker ENGINEERING LLC
4303 Stone Way N
Seattle, WA 98103
206.258.6333

DANIEL R. BUKER
STATE OF WASHINGTON
44090
STRUCTURAL ENGINEER
PROFESSIONAL ENGINEER

Zimmer Residence

4661 Forest Ave SE
Mercer Island, WA, 98040

No.	Date	Issue
	11/13/24	Permit
	4/2/25	Corrections
	4/17/25	Revisions
1	5/7/25	Corrections
2	6/2/25	Corrections

Sheet Contents

ROOF FRAMING PLAN

Sheet No.

S2.3

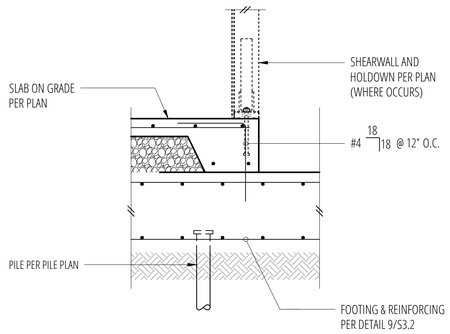

1 Slab Edge at Elevator Pit
SCALE: 3/4"=1'-0"

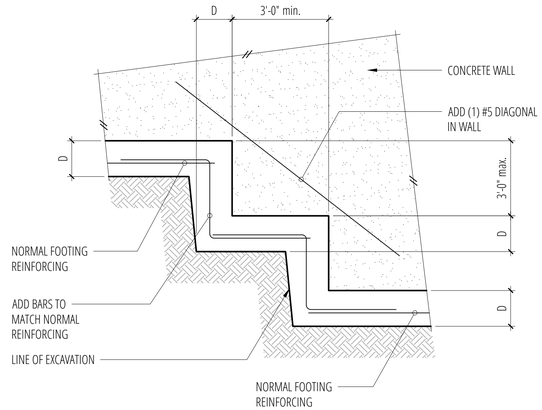

2 Stepped Footing
SCALE: 3/4"=1'-0"

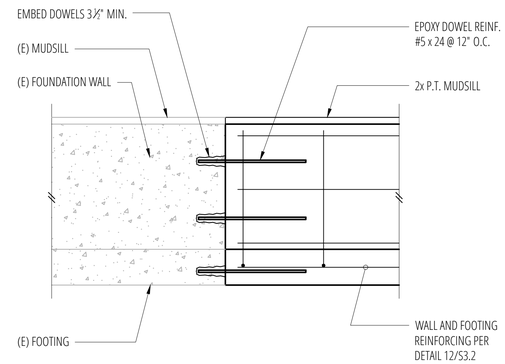

3 Epoxy Dowel Connection at (E) Foundation
SCALE: 3/4"=1'-0"

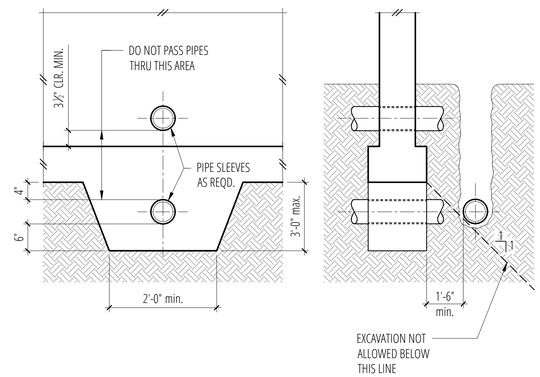

4 Pipe and Trench Locations
SCALE: 3/4"=1'-0"

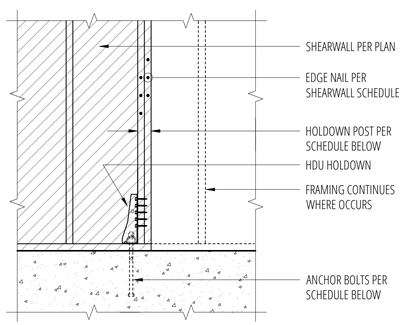

Holdown Schedule

Plan Mark	Screws	Anchor Bolt ②	A.B. Embed	Holdown Post ①		Capacity #
				IF 2x4	IF 2x6	
HDU2-SDS2.5	(6) SDS¼" x 2½"	SSTB16	12⅝"	(2) 2x4	4x6	2215/3075
HDU4-SDS2.5	(10) SDS¼" x 2½"	SB ¾ x 24	18"	4x4	4x6	4565
HDU5-SDS2.5	(14) SDS¼" x 2½"	SB ¾ x 24	18"	4x4	4x6	5645
HDU8-SDS2.5	(20) SDS¼" x 2½"	SB ¾ x 24	18"	4x4	4x6	6970
HDU11-SDS2.5	(30) SDS¼" x 2½"	SB 1 x 30	24"	4x8	6x6	9535 (8315 AT CORNER)
HDU14-SDS2.5	(36) SDS¼" x 2½"	SB 1 x 30	24"	N/A	6x6	11470 (8315 AT CORNER)

① MINIMUM SIZE OF POST AT END OF WALL UNLESS NOTED OTHERWISE ON FRAMING PLANS.

② "SSTB" & "SB" REFER TO ANCHOR BOLTS BY SIMPSON STRONG-TIE. INSTALL PER MANUFACTURER.

9 HDU Holdown Schedule
SCALE: 3/4"=1'-0"

REINFORCING SPLICE AND DEVELOPMENT LENGTH SCHEDULE

FOR F'c = 2500 psi, GRADE 60 REINFORCING

I MINIMUM STRAIGHT DEVELOPMENT LENGTH (ℓd)

BAR SIZE	TOP BARS	OTHER BARS
#3	23"	18"
#4	31"	24"
#5	40"	30"
#6	47"	36"
#7	68"	53"
#8	78"	60"
#9	88"	68"
#10	99"	77"
#11	110"	85"

II MINIMUM LAP SPLICE LENGTHS (ℓs)

BAR SIZE	TOP BARS	OTHER BARS
#3	31"	23"
#4	41"	31"
#5	51"	40"
#6	62"	47"
#7	89"	68"
#8	102"	78"
#9	114"	88"
#10	130"	99"
#11	143"	110"

TOP BARS ARE HORIZONTAL BARS WITH MORE THAN 12" DEPTH OF CONCRETE CAST BELOW THEM.

IF CLEAR CONCRETE COVER IS NOT GREATER THAN THE DIAMETER OF THE BAR, OR THE CENTER TO CENTER SPACING IS NOT GREATER THAN 3 BAR DIAMTERS, THEN LENGTHS SHALL BE INCREASED BY 50%

III MINIMUM EMBEDMENT LENGTHS (ℓdh) FOR STANDARD END HOOKS

BAR SIZE	LENGTH
#3	7"
#4	9"
#5	11"
#6	13"
#7	14"
#8	17"
#9	19"
#10	21"
#11	24"

1. SIDE COVER MUST BE EQUAL TO OR GREATER THAN 2½"
2. END COVER FOR 90° HOOKS MUST BE EQUAL TO OR GREATER THAN 2"

10 Lap Splice and Development Schedule
SCALE: 3/4"=1'-0"

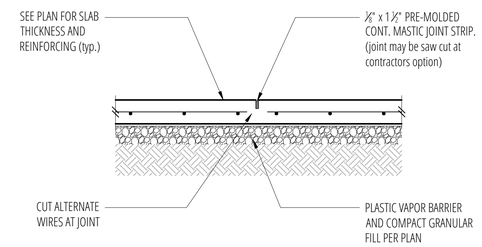

CONTROL JOINT

PROVIDE CONTROL OR CONSTRUCTION JOINTS IN SLABS ON GRADE TO BREAK UP SLAB INTO RECTANGULAR AREAS OF 400 SQUARE FEET OR LESS. AREAS TO BE APPROX. SQUARE AND HAVE NO ACUTE ANGLES. JOINT LOCATIONS TO BE APPROVED BY THE ARCHITECT.

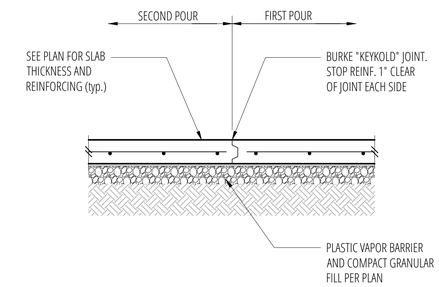

CONSTRUCTION JOINT

7 Typical Slab Joints
SCALE: 3/4"=1'-0"

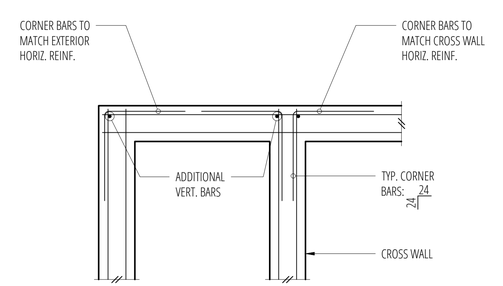

DOUBLE CURTAIN

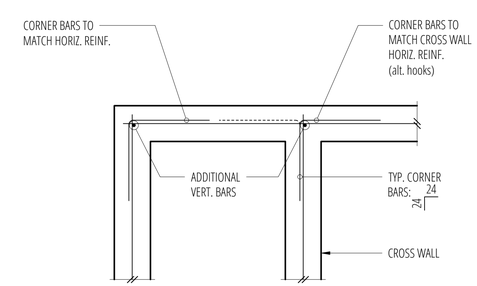

SINGLE CURTAIN

11 Typical Corner Bars at Concrete Walls and Footings
SCALE: 3/4"=1'-0"

buker ENGINEERING LLC
4303 Stone Way N
Seattle, WA 98103
206.258.6333

DANIEL R. BUKER STATE OF WASHINGTON 44090 STRUCTURAL ENGINEER PROFESSIONAL ENGINEER

Zimmer Residence

4661 Forest Ave SE
Mercer Island, WA, 98040

No.	Date	Issue
	11/13/24	Permit
	4/2/25	Corrections
	4/17/25	Revisions
1	5/7/25	Corrections
2	6/2/25	Corrections

Sheet Contents

CONCRETE DETAILS

Sheet No.

S3.1

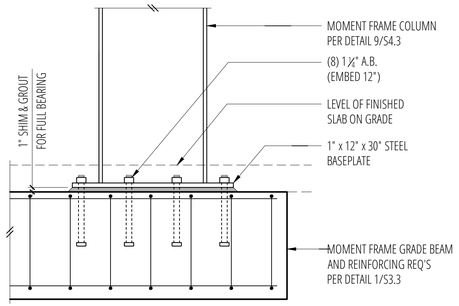

1 Grade Beam at Moment Frame
SCALE: 3/4"=1'-0"

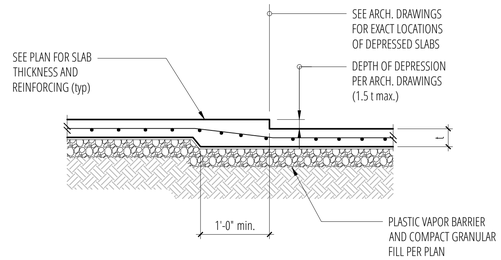

2 Typical Depressed Slab on Grade
SCALE: 3/4"=1'-0"

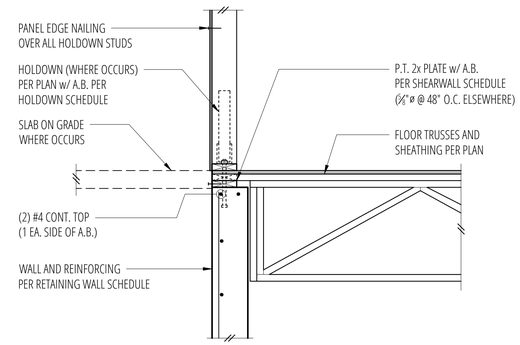

3 Exterior Floor Framing at Full Height Concrete
SCALE: 3/4"=1'-0"

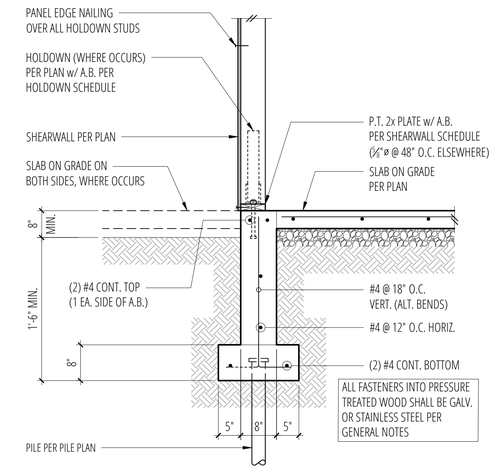

4 Exterior Wall w/ Slab on Grade
SCALE: 3/4"=1'-0"

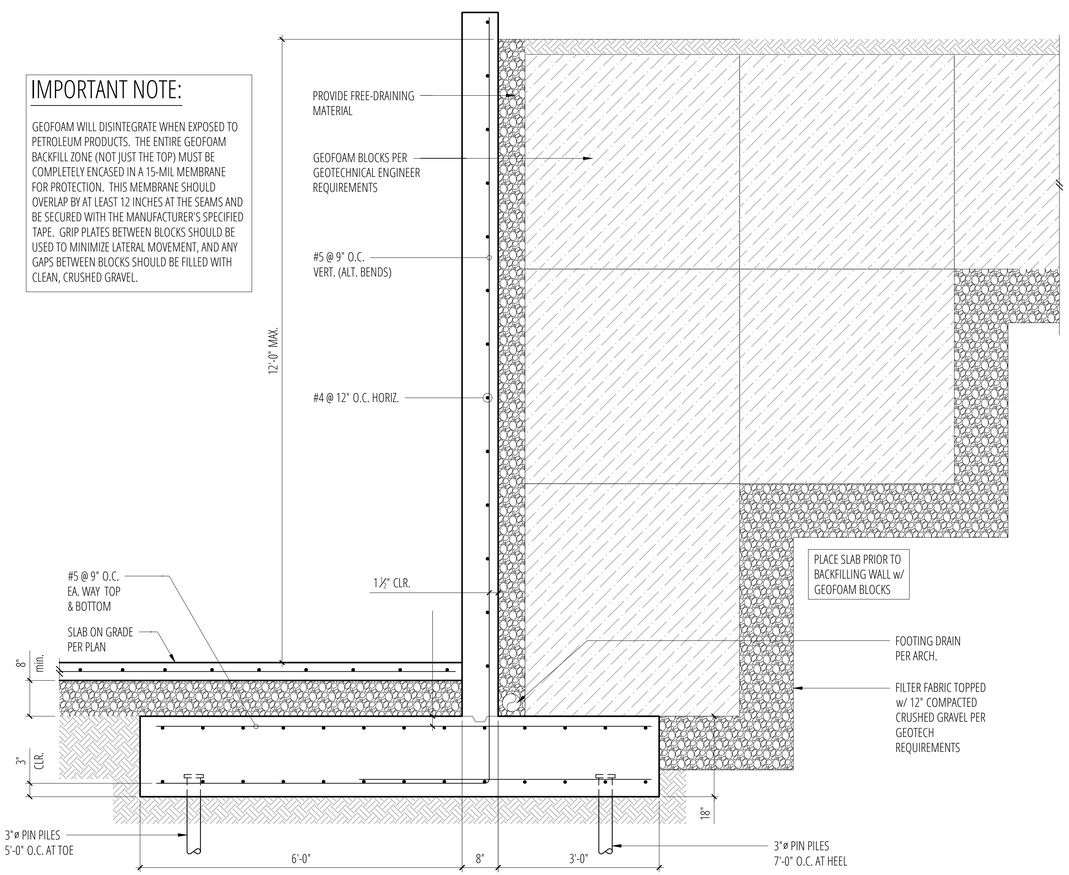

9 Retaining Wall Schedule with Slab on Grade
SCALE: 3/4"=1'-0"

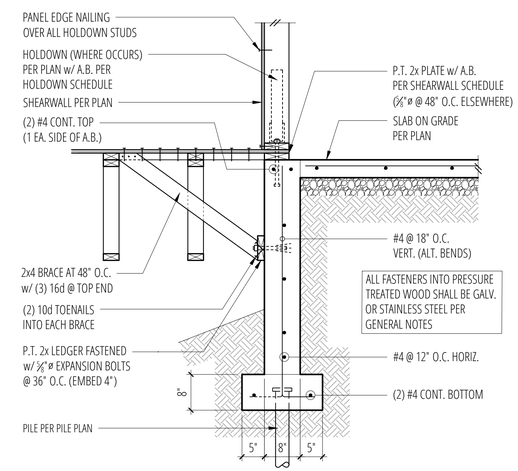

7 Foundation Wall at Garage Slab/Crawlspace
SCALE: 3/4"=1'-0"

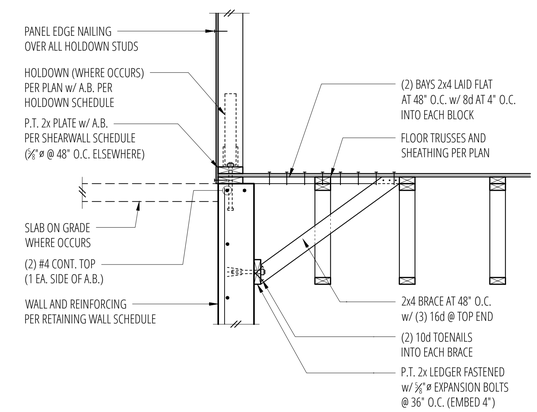

8 Exterior Floor Framing at Full Height Concrete
SCALE: 3/4"=1'-0"

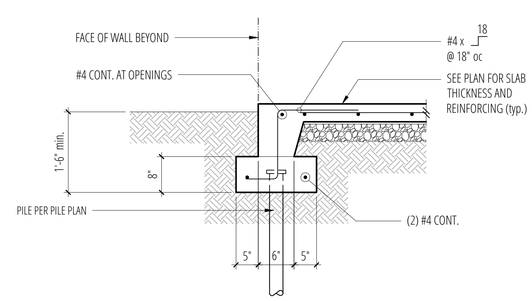

11 Turned-Down Slab Edge
SCALE: 3/4"=1'-0"

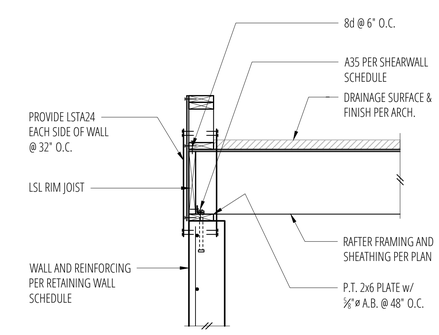

12 Rafter Framing at Garage Concrete Wall
SCALE: 3/4"=1'-0"

buker ENGINEERING LLC
4303 Stone Way N
Seattle, WA 98103
206.258.6333

DANIEL R. BUKER
STATE OF WASHINGTON
44090
STRUCTURAL ENGINEER
PROFESSIONAL ENGINEER

Zimmer Residence

4661 Forest Ave SE
Mercer Island, WA, 98040

No.	Date	Issue
	11/13/24	Permit
	4/2/25	Corrections
	4/17/25	Revisions
1	5/7/25	Corrections
2	6/2/25	Corrections

Sheet Contents

CONCRETE DETAILS

Sheet No.

S3.2

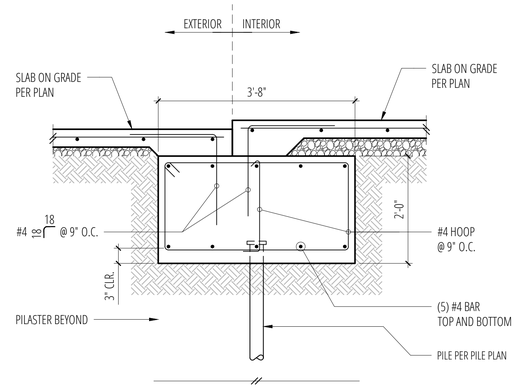

1 Grade Beam at Moment Frame
SCALE: 3/4"=1'-0"

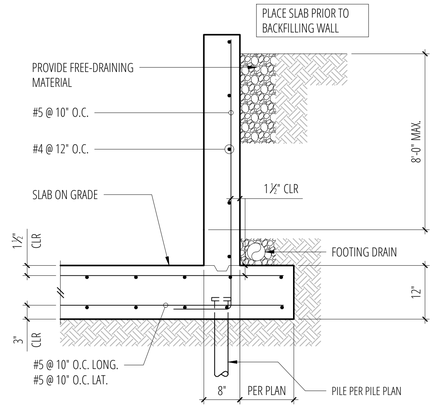

2 Sub-Basement Retaining Wall
SCALE: 3/4"=1'-0"

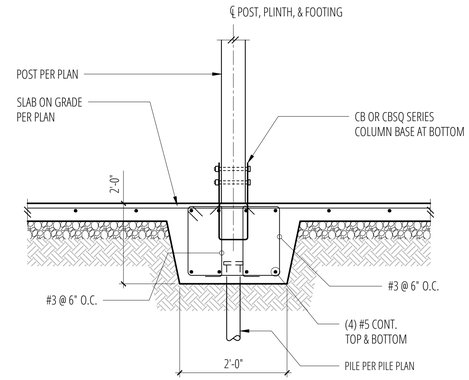

3 Monolithic Grade Beam at Interior Post
SCALE: 3/4"=1'-0"

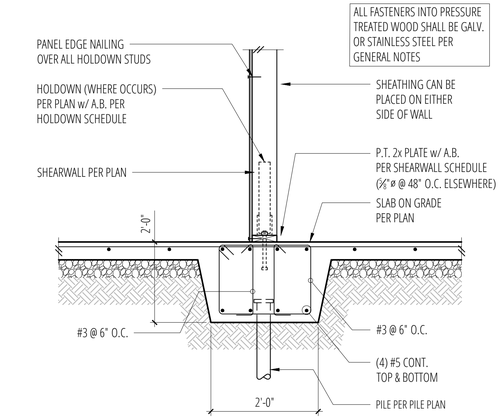

4 Monolithic Grade Beam at Interior Wall
SCALE: 3/4"=1'-0"

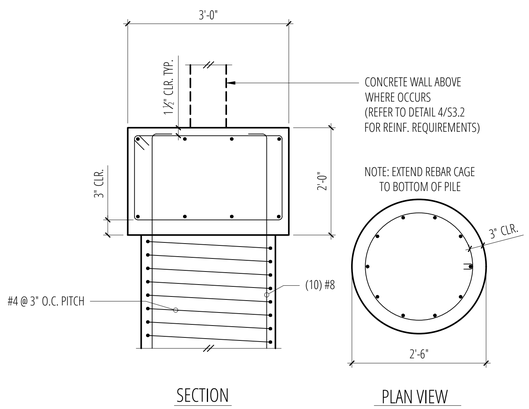

5 Auger-Cast Piles at Grade Beam
SCALE: 3/4"=1'-0"

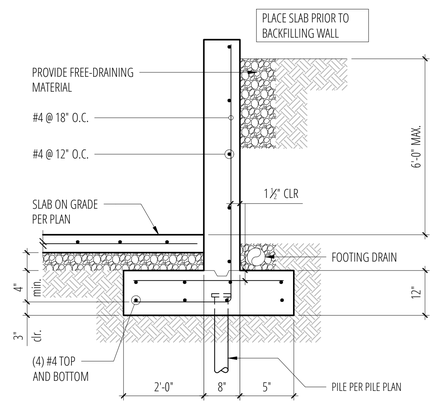

6 Standard Retaining Wall
SCALE: 3/4"=1'-0"

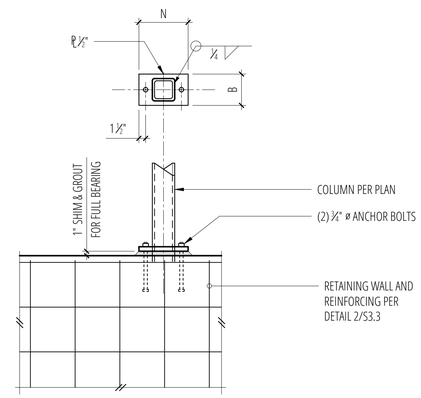

7 Baseplate at HSS Column
SCALE: 3/4"=1'-0"

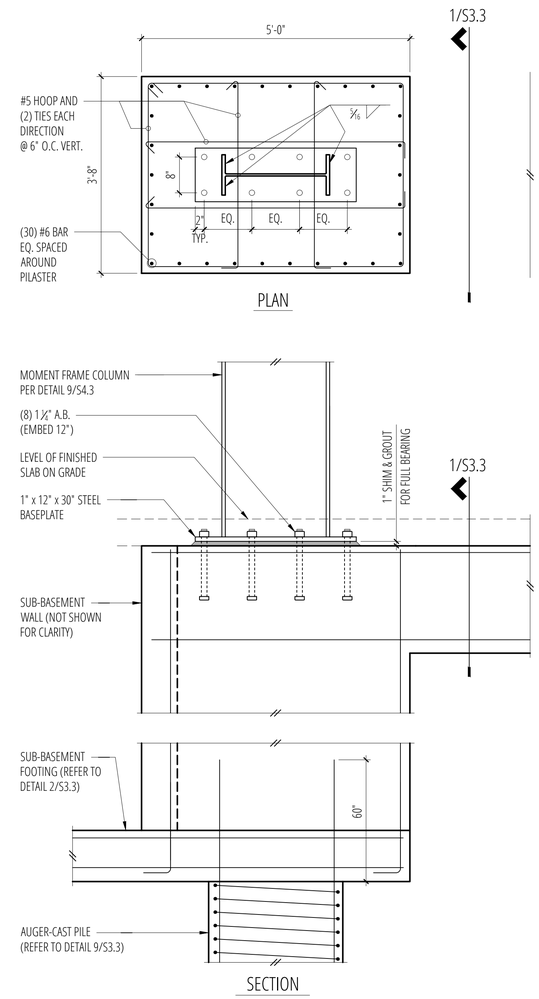

12 Grade Beam and Pilaster at Moment Frame
SCALE: 3/4"=1'-0"

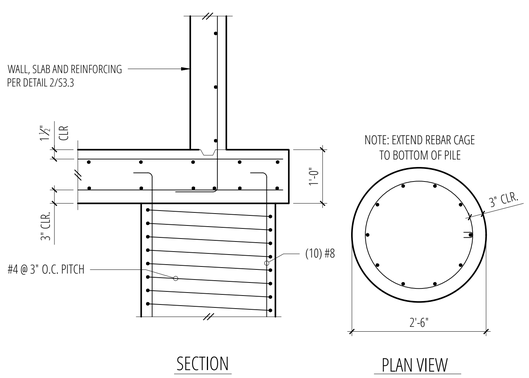

9 Auger-Cast Piles at Sub-Basement Wall
SCALE: 3/4"=1'-0"

10 Not Used
SCALE: 3/4"=1'-0"

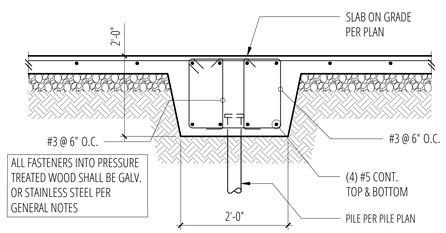

11 Monolithic Grade Beam
SCALE: 3/4"=1'-0"

buker ENGINEERING LLC
4303 Stone Way N
Seattle, WA 98103
206.258.6333

DANIEL R. BUKER
STATE OF WASHINGTON
44090
STRUCTURAL ENGINEER
PROFESSIONAL ENGINEER

Zimmer Residence

4661 Forest Ave SE
Mercer Island, WA, 98040

No.	Date	Issue
	11/13/24	Permit
	4/2/25	Corrections
	4/17/25	Revisions
1	5/7/25	Corrections
2	6/2/25	Corrections

Sheet Contents

CONCRETE DETAILS

Sheet No.

S3.3

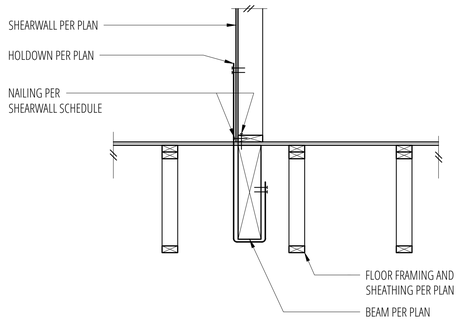

1 Flush Beam in Floor (Parallel)

SCALE: 3/4"=1'-0"

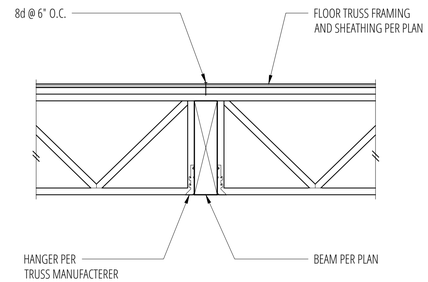

2 Flush Beam in Floor

SCALE: 3/4"=1'-0"

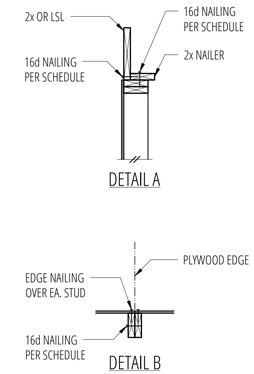

PLAN VIEW AT ABUTTING PANEL EDGES OF W3 & W2

SHEARWALL SCHEDULE ①②③⑤⑥⑦

MARK	SHEATHING	PANEL EDGE NAILING	TOP PLATE CONNECTION		BASE PLATE CONNECTION	
			IF TJI	IF 2x OR LSL ⑧ ⑨	AT WOOD	AT CONCRETE
W6	15/32" CDX PLYWOOD	8d @ 6"OC	16d @ 6" OC	A35 @ 24" OC	16d @ 6" OC	⅝" ø A.B. @ 48" OC
W4	15/32" CDX PLYWOOD	8d @ 4" OC	16d @ 4" OC	A35 @ 16" OC	16d @ 4" OC	⅝" ø A.B. @ 32" OC
W3 ④	19/32" CDX PLYWOOD	8d @ 3"OC	(2) ROWS 16d @ 6" OC	A35 @ 12" OC	16d @ 3" OC ⑩	⅝" ø A.B. @ 16" OC
W2 ④	15/32" CDX PLYWOOD	8d @ 2"OC	(2) ROWS 16d @ 4½" OC	A35 @ 9" OC	(2) ROWS 16d @ 4½" OC ⑪	⅝" ø A.B. @ 12" OC

1. BLOCK PANEL EDGES WITH 2x MIN. LAID FLAT AND NAIL PANELS TO INTERMEDIATE SUPPORTS WITH 8d @ 12" o.c.
2. 8d NAILS SHALL BE 0.131" x 2½" (common) - 16d NAILS SHALL BE 0.135"ø x 3½" (box)
3. EMBED ANCHOR BOLTS AT LEAST 7" EXPANSION BOLTS MAY BE SUBSTITUTED FOR ANCHOR BOLTS WITH 4" EMBEDMENT. ALL BOLTS SHALL HAVE 3" x 3" x¼" PLATE WASHERS. EXTEND TO WITHIN ½" OF THE PLYWOOD SHEATHING.
4. 3x STUDS OR DOUBLE STUDS NAILED TOGETHER W/ BASE PLATE NAILING ARE REQUIRED AT ABUTTING PANEL EDGES OF W3 AND W2. SEE DETAIL B. WHERE 3x STUDS ARE USED FOR W2, STAGGER NAILS AT ADJOINING PANEL EDGES.
5. TWO STUDS MINIMUM ARE REQUIRED AT EACH END OF ALL SHEARWALLS AND ALL END STUDS SHALL RECEIVE PANEL EDGE NAILING.
6. ALL EXTERIOR WALLS SHALL BE W6, UNLESS NOTED OTHERWISE.
7. 7/16" O.S.B. MAY BE SUBSITUTED FOR 15/32" CDX.
8. LTP4's MAY BE SUBSTITUTED FOR A35's AT CONTRACTORS OPTION.
9. A 2x NAILER ATTACHED W/ BASE PLATE NAILING PER DETAIL A MAY BE SUBSTITUTED FOR A35's AT CONTRACTORS OPTION.
10. STAGGER NAILS IN ROW W/ ½" MIN. OFFSET.
11. MINIMUM OFFSET BETWEEN ROWS ½, AND MINIMUM RIM OR JOIST 3½" WIDE.

3 Shearwall Schedule

SCALE: 3/4"=1'-0"

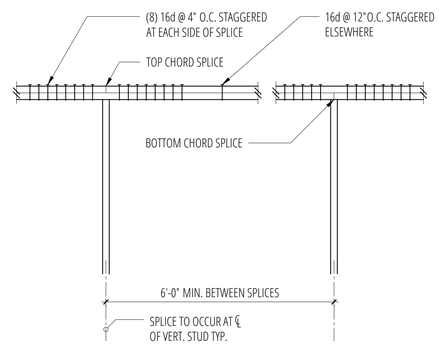

5 Typical Top Plate Splice

SCALE: 3/4"=1'-0"

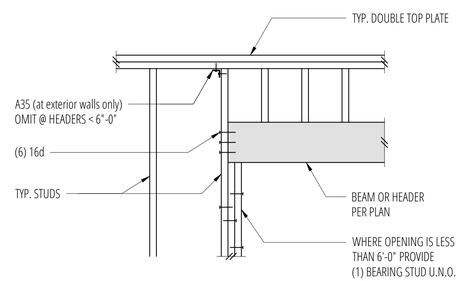

6 Typical Header Support

SCALE: 3/4"=1'-0"

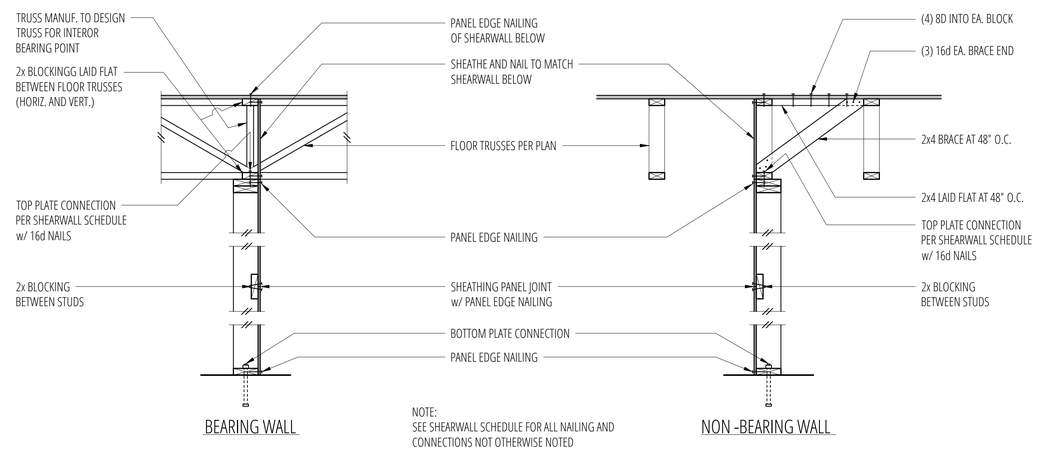

7 Typical Shearwall Construction

SCALE: 3/4"=1'-0"

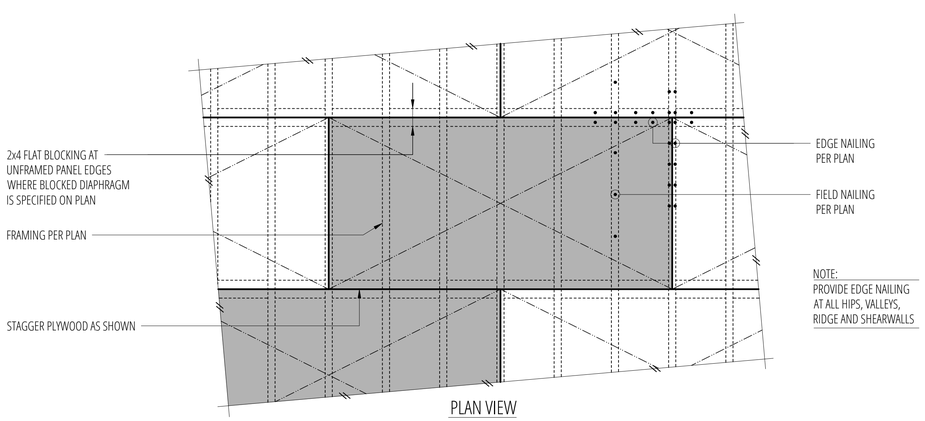

9 Typical Diaphragm Sheathing and Nailing

SCALE: 3/4"=1'-0"

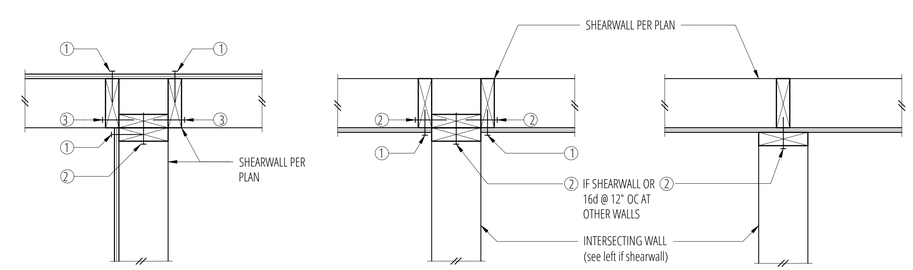

① PLYWOOD PANEL EDGE NAILING PER SHEARWALL SCHEDULE

② BASE PLATE NAILING PER SHEARWALL SCHEDULE

③ 16d @ 8" OC

11 Typical Shearwall Intersection

SCALE: 3/4"=1'-0"

buker ENGINEERING LLC
4303 Stone Way N
Seattle, WA 98103
206.258.6333

DANIEL R. BUKER
STATE OF WASHINGTON
44090
STRUCTURAL ENGINEER
PROFESSIONAL ENGINEER

Zimmer Residence

4661 Forest Ave SE
Mercer Island, WA, 98040

No.	Date	Issue
	11/13/24	Permit
	4/2/25	Corrections
	4/17/25	Revisions
1	5/7/25	Corrections
2	6/2/25	Corrections

Sheet Contents

FLOOR FRAMING DETAILS

Sheet No.

S4.1

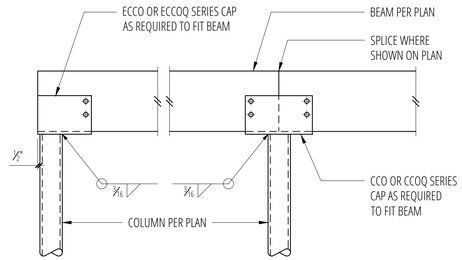

1 CC/CCQ Series Connection at Steel Column
SCALE: 3/4"=1'-0"

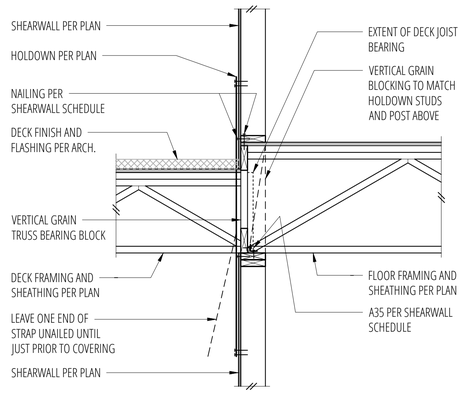

2 Floor to Deck Framing Transition (Perp.)
SCALE: 3/4"=1'-0"

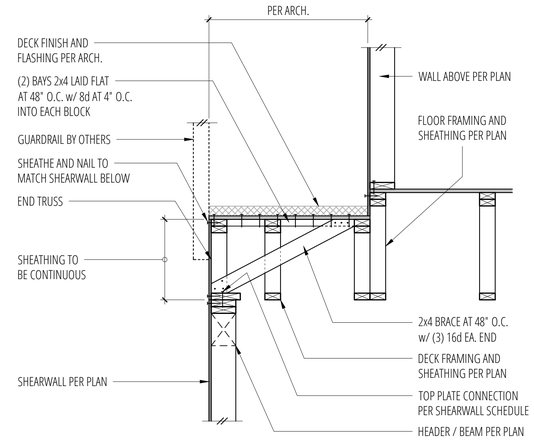

3 Floor to Deck Framing Transition (Parallel)
SCALE: 3/4"=1'-0"

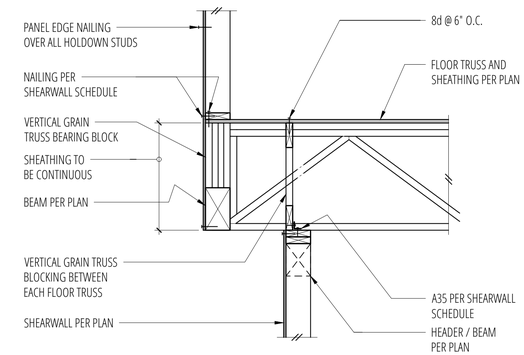

4 Cantilevered Floor Framing
SCALE: 3/4"=1'-0"

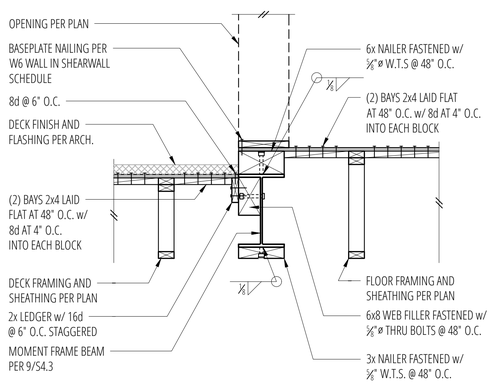

5 Floor to Deck Framing at Moment Frame
SCALE: 3/4"=1'-0"

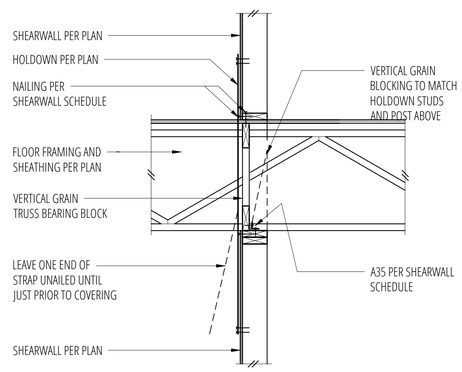

6 Interior Shearwall
SCALE: 3/4"=1'-0"

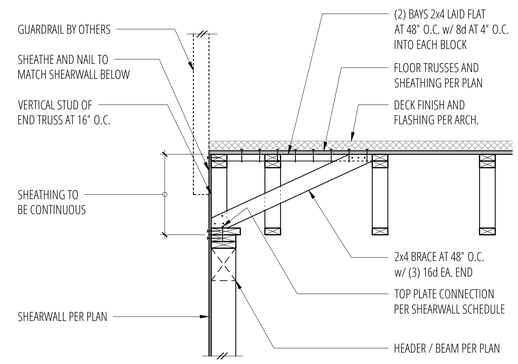

7 Deck Floor Framing (Parallel)
SCALE: 3/4"=1'-0"

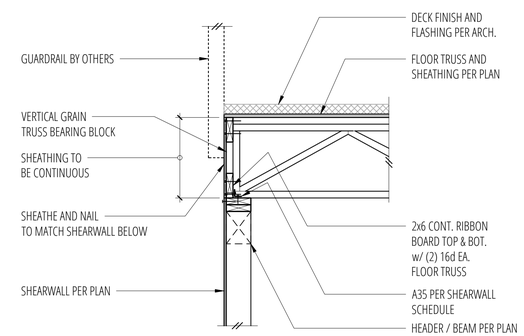

8 Deck Floor Framing (Perpendicular)
SCALE: 3/4"=1'-0"

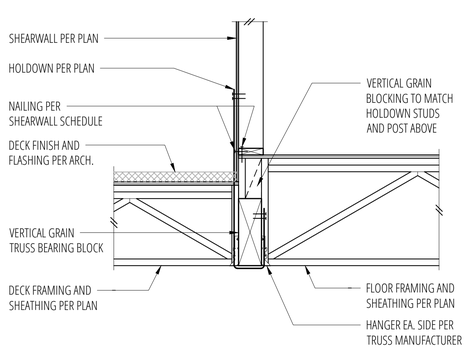

9 Flush Beam at Deck to Floor Transition
SCALE: 3/4"=1'-0"

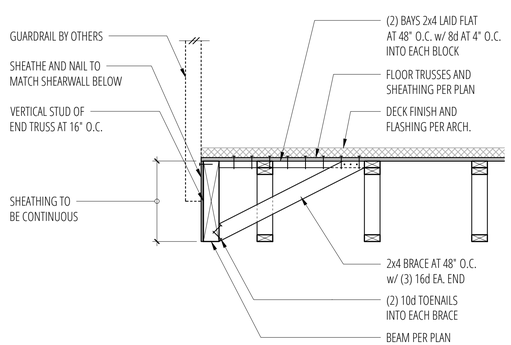

10 Exterior Deck Framing
SCALE: 3/4"=1'-0"

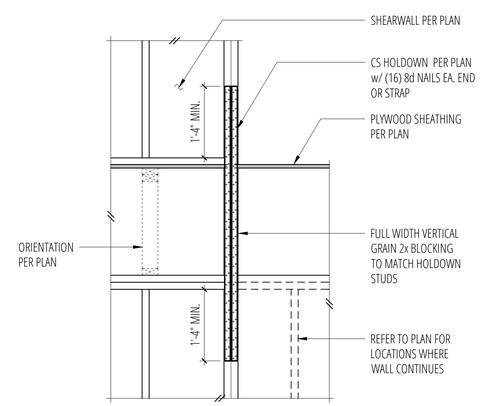

11 Typical CS Holdown at Floor
SCALE: 3/4"=1'-0"

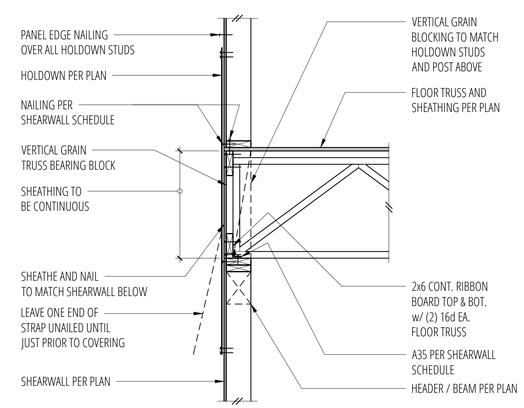

12 Exterior Floor Framing (Perpendicular)
SCALE: 3/4"=1'-0"

buker ENGINEERING LLC
4303 Stone Way N
Seattle, WA 98103
206.258.6333

DANIEL R. BUKER
STATE OF WASHINGTON
44090
STRUCTURAL ENGINEER
PROFESSIONAL ENGINEER

Zimmer Residence

4661 Forest Ave SE
Mercer Island, WA, 98040

No.	Date	Issue
	11/13/24	Permit
	4/2/25	Corrections
	4/17/25	Revisions
1	5/7/25	Corrections
2	6/2/25	Corrections

Sheet Contents

FLOOR FRAMING DETAILS

Sheet No.

S4.2

1. SEE 19/YLMC1 FOR ADDITIONAL WELDING INFORMATION.
2. SEE 20/YLMC1 FOR ADDITIONAL SHEAR TAB INFORMATION.
3. DIMENSIONS SHOWN ARE FOR DESIGN PURPOSES ONLY AND SHALL FIELD-VERIFIED AGAINST ARCHITECTURAL DRAWINGS.
4. SEE YLMC1 FOR GENERAL NOTES AND CONNECTION DETAILING.
5. SEE YLMC2 FOR CONNECTION BOLTING AND PLATE DETAILING REQUIREMENTS FOR FABRICATION.
6. SEE YLMC3 FOR CRUCIFORM COLUMN AND SLOPED BEAM DETAILING.
7. MOMENT FRAME LINE-WORK REPRESENTS CENTERLINE OF ALL BEAMS AND COLUMNS.

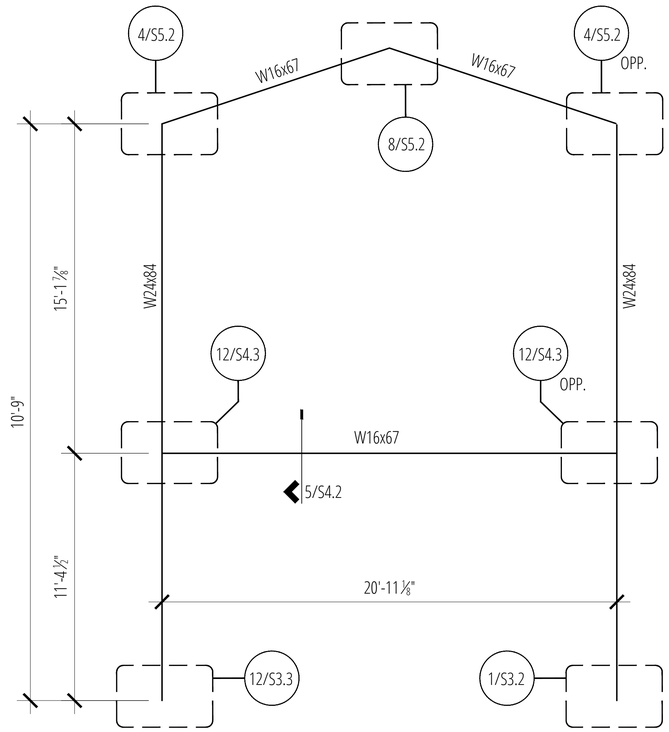

4 SCALE: 3/4"=1'-0"

No.	Link Size	Qty (kits)
1	YLMC6-3.5	4

Elev. ID	Grid ID	Story	Column Size	Left no. ST	Left ST Thk (in)	Right no. ST	Right ST Thk (in)	Cont_PL Thk (in)	Dblr_PL Thk (in)	W1A (in)	N_side of W1A
1	A	Story2	W24X84	-	-	1	3/8	3/8	-	-	-
1	B	Story2	W24X84	1	3/8	-	-	3/8	-	1/4	2
1	A	Story1	W24X84	-	-	1	3/8	3/8	-	-	-
1	B	Story1	W24X84	1	3/8	-	-	3/8	-	1/4	2

N_side of W1A	W1A_PJP (in)	N_side of W1A_PJP	W1B (in)	N_side of W1B	W1B_PJP (in)	N_side of W1B_PJP	W2 (in)	N_side of W2	W3 (in)	N_side of W3	W4 (in)
-	-	-	1/4	2	-	-	3/16	2	3/16	2	-
2	-	-	-	-	-	-	3/16	2	3/16	2	-
-	-	-	1/4	2	-	-	3/16	2	3/16	2	-
2	-	-					3/16	2	3/16	2	-

N_side of W4	W4A Dia. (in)	W4A Depth (in)	W5 (in)	N_Side of W5
-	-	-	-	-
-	-	-	-	-
-	-	-	-	-
-	-	-	-	-

8 SCALE: 3/4"=1'-0"

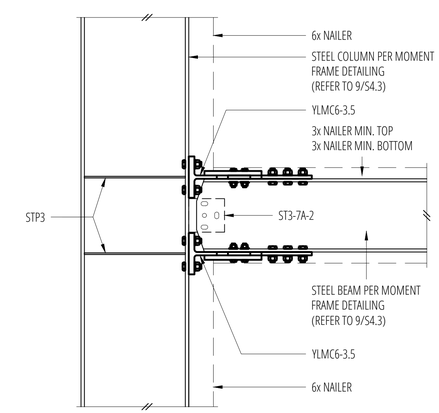

9 Steel Moment Frame
SCALE: N.T.S.

12 Moment Frame - Beam to Column
SCALE: 3/4"=1'-0"

buker ENGINEERING LLC
4303 Stone Way N
Seattle, WA 98103
206.258.6333

DANIEL R. BUKER
STATE OF WASHINGTON
44090
STRUCTURAL ENGINEER
PROFESSIONAL ENGINEER

Zimmer Residence

4661 Forest Ave SE
Mercer Island, WA, 98040

No.	Date	Issue
	11/13/24	Permit
	4/2/25	Corrections
	4/17/25	Revisions
1	5/7/25	Corrections
2	6/2/25	Corrections

Sheet Contents

FLOOR FRAMING DETAILS

Sheet No.

S4.3

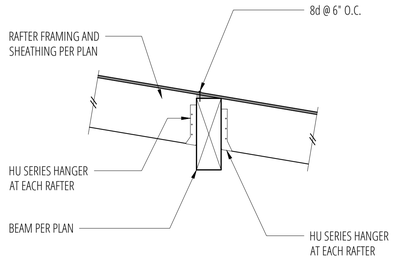

1 Rafter Framing at Flush Beam
SCALE: 3/4"=1'-0"

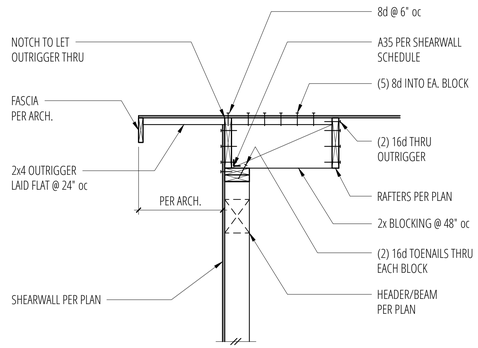

2 Pitched Roof Framing (Parallel)
SCALE: 3/4"=1'-0"

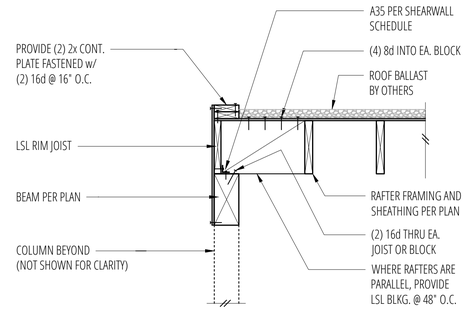

3 Post and Beam at Flat Roof (Parallel)
SCALE: 3/4"=1'-0"

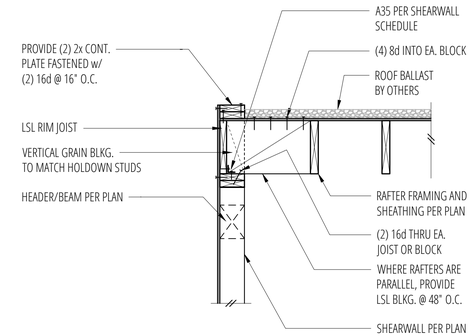

4 Flat Roof Framing (Parallel)
SCALE: 3/4"=1'-0"

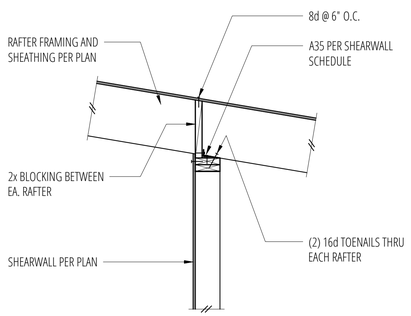

5 Rafter Framing Over Interior Shearwall
SCALE: 3/4"=1'-0"

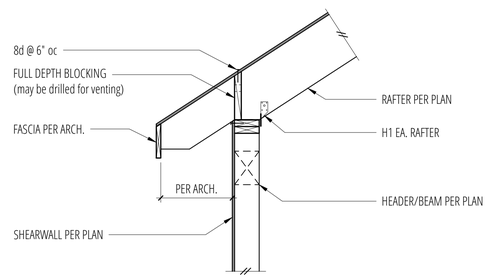

6 Pitched Roof Framing (Perpendicular)
SCALE: 3/4"=1'-0"

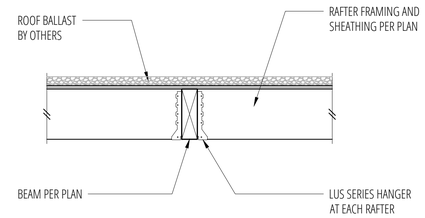

7 Flush Beam at Flat Roof
SCALE: 3/4"=1'-0"

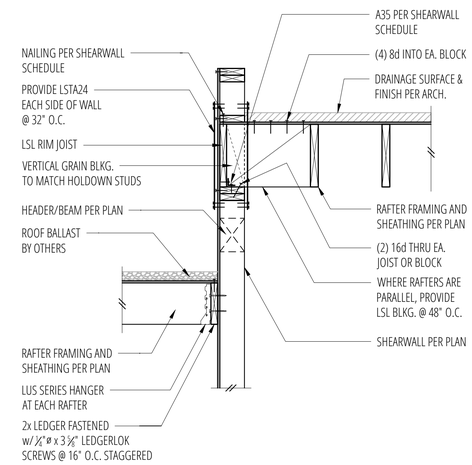

8 Rafter Framing at Garage (Parallel)
SCALE: 3/4"=1'-0"

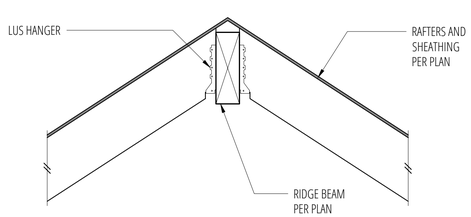

9 Ridge Beam
SCALE: 3/4"=1'-0"

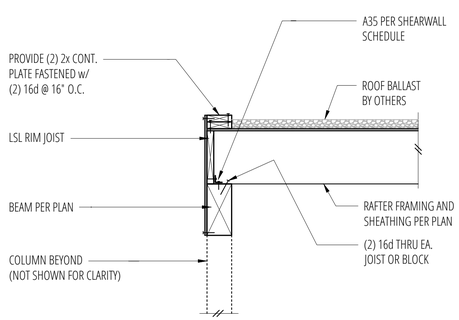

10 Post and Beam at Flat Roof (Perpendicular)
SCALE: 3/4"=1'-0"

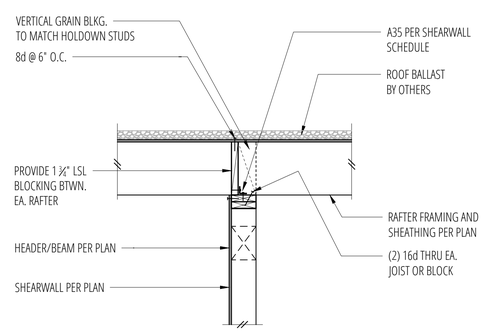

11 Interior Shearwall Below Flat Roof
SCALE: 3/4"=1'-0"

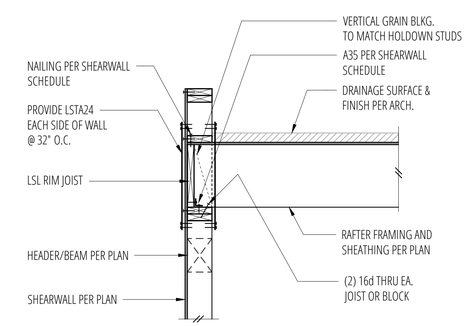

12 Rafter Framing at Garage (Perpendicular)
SCALE: 3/4"=1'-0"

buker ENGINEERING LLC
4303 Stone Way N
Seattle, WA 98103
206.258.6333

DANIEL R. BUKER
STATE OF WASHINGTON
44090
STRUCTURAL ENGINEER
PROFESSIONAL ENGINEER

Zimmer Residence

4661 Forest Ave SE
Mercer Island, WA, 98040

No.	Date	Issue
	11/13/24	Permit
	4/2/25	Corrections
	4/17/25	Revisions
1	5/7/25	Corrections
2	6/2/25	Corrections

Sheet Contents

ROOF FRAMING DETAILS

Sheet No.

S5.1

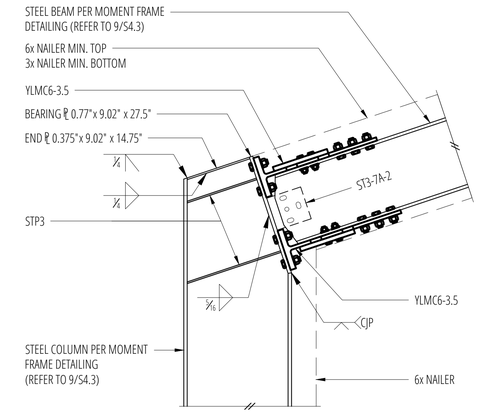

1 SCALE: 3/4"=1'-0"

2 SCALE: 3/4"=1'-0"

3 SCALE: 3/4"=1'-0"

4 Moment Frame - Pitched Beam to Column
SCALE: 3/4"=1'-0"

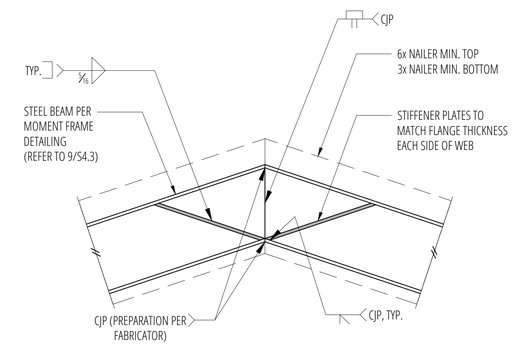

5 SCALE: 3/4"=1'-0"

6 SCALE: 3/4"=1'-0"

7 SCALE: 3/4"=1'-0"

8 Moment Frame Ridge
SCALE: 3/4"=1'-0"

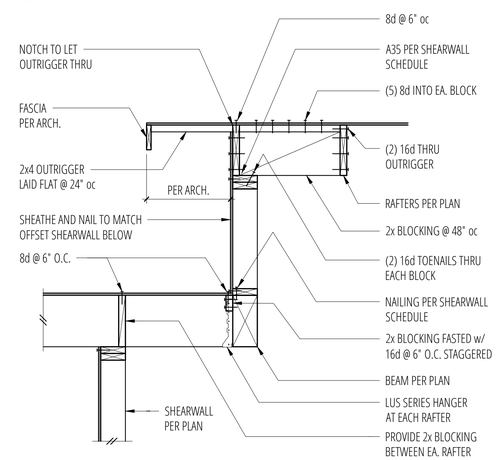

9 SCALE: 3/4"=1'-0"

10 SCALE: 3/4"=1'-0"

11 Offset Shearwall at Roof
SCALE: 3/4"=1'-0"

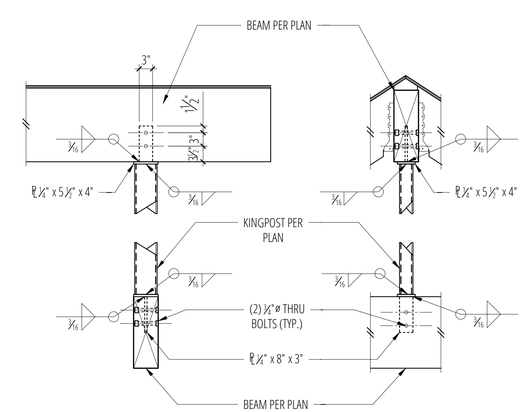

12 Ridge Beam Kingpost and Bearing Plates
SCALE: 3/4"=1'-0"

buker ENGINEERING LLC
4303 Stone Way N
Seattle, WA 98103
206.258.6333

DANIEL R. BUKER
STATE OF WASHINGTON
44090
STRUCTURAL ENGINEER
PROFESSIONAL ENGINEER

Zimmer Residence

4661 Forest Ave SE
Mercer Island, WA, 98040

No.	Date	Issue
	11/13/24	Permit
	4/2/25	Corrections
	4/17/25	Revisions
1	5/7/25	Corrections
2	6/2/25	Corrections

Sheet Contents

ROOF FRAMING DETAILS

Sheet No.

S5.2

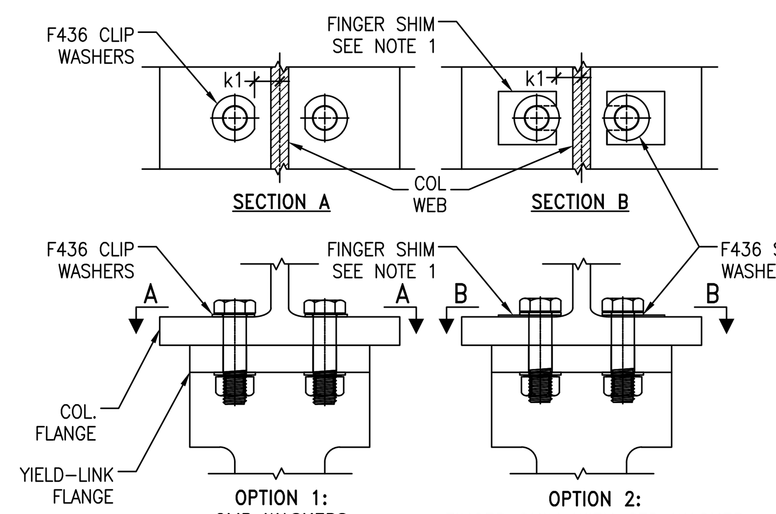

NOTE:
1. FINGER SHIM SHALL BE STRUCTURAL GRADE STEEL MATERIAL. TRIM TO FIT AS REQUIRED.
2. K1 VALUE FOR STEEL SHAPE VARIES. BOLT WASHER/SHIM SHALL BEAR FLAT ON COL. FLANGE.
3. SEE RCSC SPECIFICATION ON USE OF WASHERS ON SLOPING SURFACES

BOLT BEARING NEAR COLUMN WEB — 17

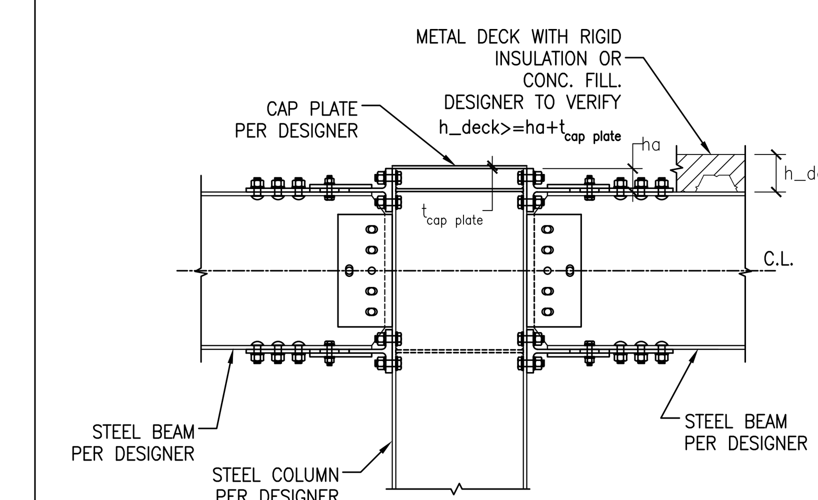

NOTE:
1. SEE 5/– OR 9/– FOR INFO NOT NOTED
2. SEE 8/– FOR ha VALUES FOR DIFFERENT LINK SIZES

ROOF CONN. W/BEAMS ON EA. SIDE — 13

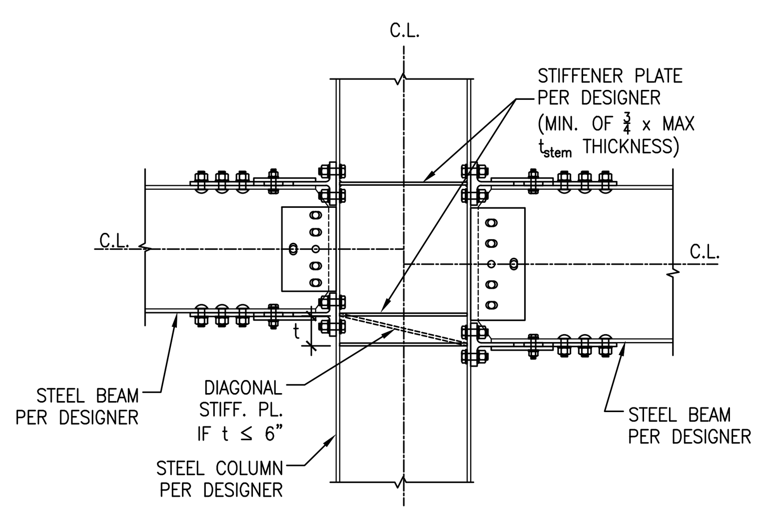

NOTE:
1. SEE 5/– FOR INFO NOT NOTED

MULTI-STORY COLUMNS (2 BEAMS) — 9

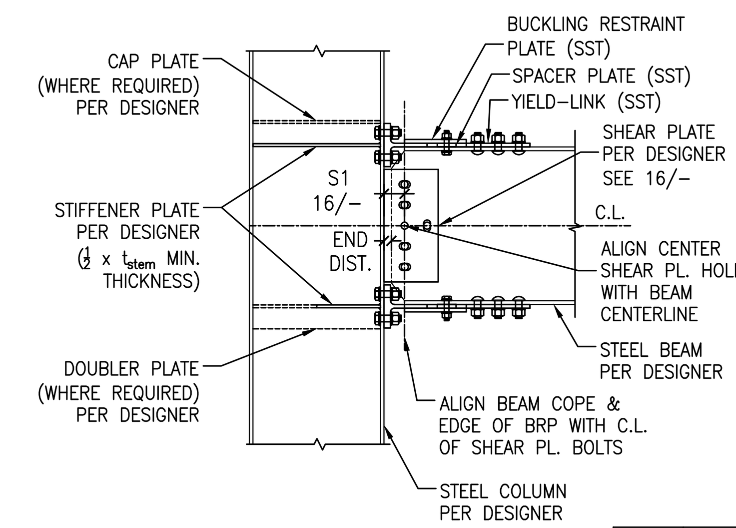

TYPE	END DIST.
YL4	1.00"
YL6	1.75"
YL8	2.25"

NOTE:
SEE 6/– FOR BOLTING REQUIREMENTS
SEE 7/– FOR PROTECTED ZONE AT YIELD-LINK CONNECTION

MULTI-STORY COLUMNS (1-BEAM) — 5

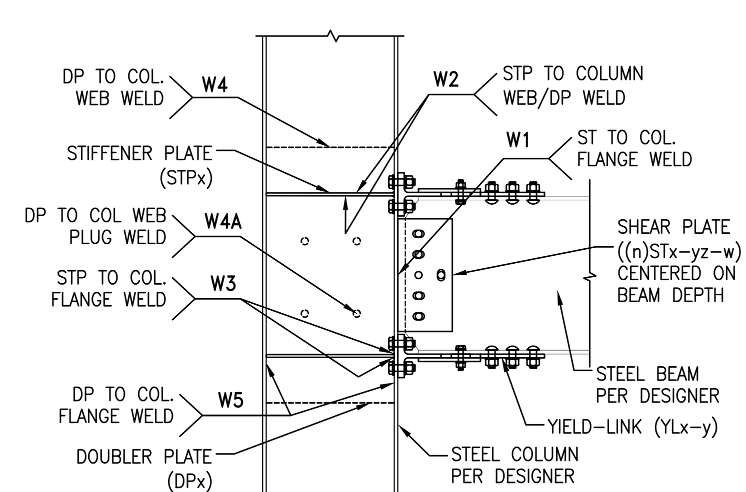

LEGEND:
DPx: x IS x/8-IN. THICK DOUBLER PLATES (i.e. DP4 IS 1/2" THICK DOUBLER PL.)
STPx: x IS x/8-IN. THICK STIFFENER/CONTINUITY PLATE
YLx-y: x IS x/8-IN THICK LINK STEM, y IS THE LINK YIELDING WIDTH
(n)STx-yz-w: n IS THE NUMBER OF SHEAR PLATES WHEN (2) ARE REQUIRED
x IS x/8-IN THICK SHEAR PLATE, y IS y/8-IN DIM. BOLT,
z IS BOLT GR/THREAD COND.: A=A325N, B=A325X, C=A490N, D=A490X
w IS THE NUMBER OF HORIZONTAL BOLTS

NOTES:
1. SEE 16/YLMC1 FOR SHEAR PLATE GEOMETRY DETAILS
2. SEE 10/YLMC2 FOR DOUBLE SHEAR PLATE DETAIL, (2)STx-yz-w,
3. SEE 11/YLMC2 FOR STIFFENER PLATE DETAILS
4. SEE 12/YLMC2 FOR DOUBLER PLATE WELDING DETAILS
5. SEE 17/YLMC2 FOR COLUMN FLANGE HOLE DETAILS
6. YIELD-LINKS, BUCKLING RESTRAINT PLATES AND SPACER PLATES PROVIDED BY SIMPSON STRONG-TIE. ALL OTHER PLATES, STEEL AND FASTENERS PROVIDED BY OTHERS

YIELD-LINK CONNECTION LEGEND — 19

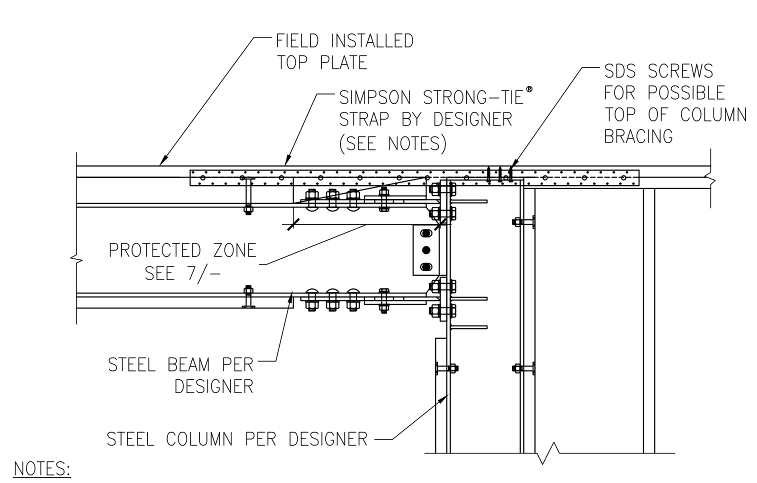

NOTES:
1. IF POSSIBLE DO NOT SPLICE FIELD INSTALLED TOP PLATE WITHIN MOMENT FRAME.
2. WHEN TOP PLACE SPLICE ARE REQUIRED WITHIN MOMENT FRAME, DESIGNER TO DESIGN/SPECIFY NO NAILING WITHIN PROTECTED ZONE.

TOP PLATE SPLICE DETAILS — 14

Holdown	Fasteners	Allowable tension load
LTT20B-3/4	(10) 10d	1500 lbs
HTT5-3/4	(26) 10dx1.5"	4065 lbs

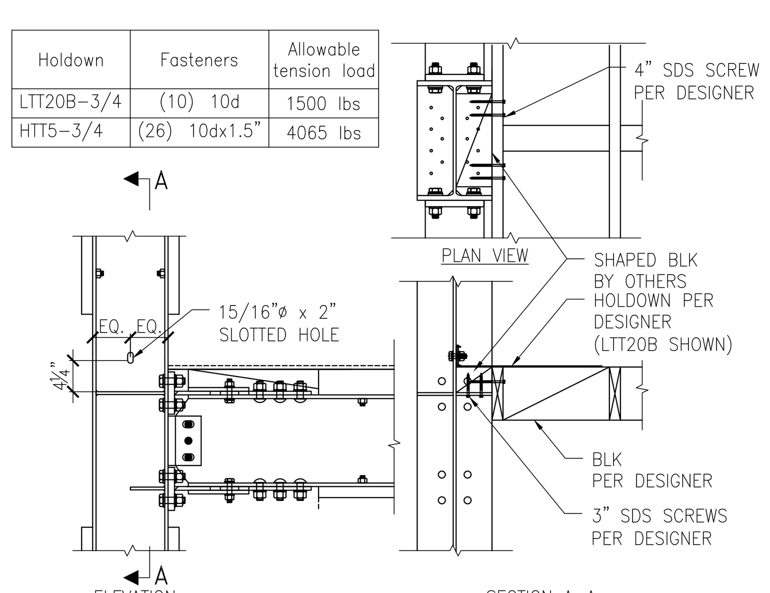

COL. BRACING AT FLOOR LEVEL — 15

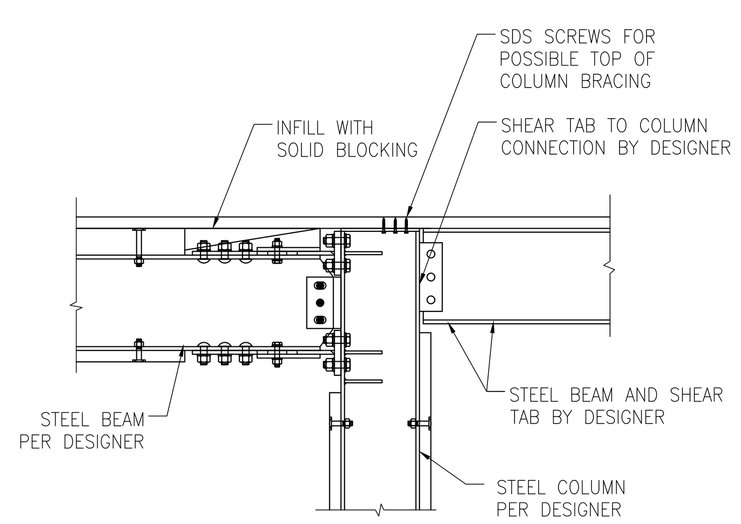

A: CONNECT STEEL BEAM TO STEEL COLUMN

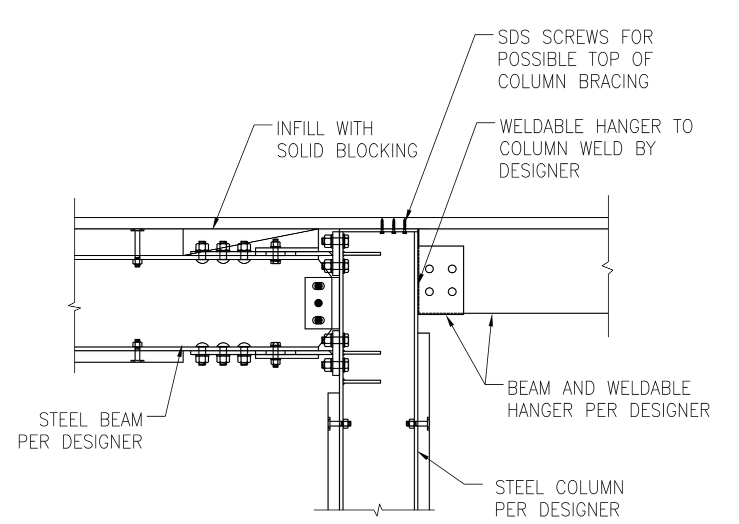

B: CONNECT WOOD BEAM TO STEEL COLUMN

COLLECTOR DETAILS — 11

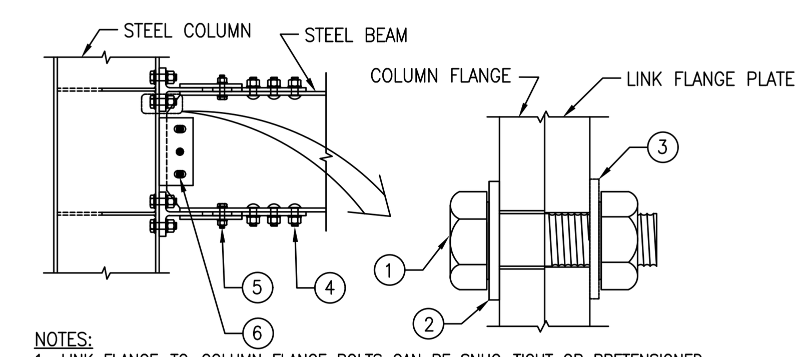

NOTES:
1. LINK FLANGE-TO-COLUMN FLANGE BOLTS CAN BE SNUG-TIGHT OR PRETENSIONED
2. AT COL. FLANGE SLOTTED HOLES:
A) SNUG-TIGHT JOINT: USE ASTM F436 WASHER OR 5/16 IN. THICK PL WASHER.
B) PRETENSIONED JOINT: USE 5/16 IN. THICK PL WASHER OR CONT. BAR PER RCSC.
3. AT LINK FLANGE HOLES:
A) SNUG-TIGHT JOINT: WASHER NOT REQUIRED.
B) PRETENSIONED JOINT: USE ASTM F436 WASHER.
4. LINK STEM-TO-BEAM FLANGE BOLTS SHALL BE PRETENSIONED.
A) USE ASTM F436 WASHER PER PRETENSIONING METHOD
5. BUCKLING RESTRAINT PLATE-TO-BEAM FLANGE BOLTS MUST BE SNUG-TIGHT. NO WASHERS REQUIRED AT THE BEAM FLANGE SIDE. USE ASTM F436 WASHER AT BRP SIDE.
6. SHEAR PLATE TO BEAM WEB BOLTS CAN BE SNUG-TIGHT OR PRETENSIONED.
A) AT SHEAR PLATE SLOTTED HOLES: USE ASTM F436 WASHER OR 5/16 IN. THICK PL WASHER FOR SNUG-TIGHT JOINTS.
B) USE USE 5/16 IN. THICK PL WASHER OR CONT. BAR PER RCSC FOR PRETENSIONED JOINTS. AT BEAM WEB STANDARD HOLES: WASHERS NOT REQUIRED FOR SNUG-TIGHT JOINTS. USE ASTM F436 WASHER FOR PRETENSIONED JOINTS.
7. PRETENSIONING METHODS CAN BE: TURN-OF-NUT; CALIBRATED WRENCH; TWISTED OFF TYPE; OR BY USE OF DIRECT TENSION INDICATING WASHERS PER RCSC. WASHER REQUIREMENTS VARY PER PRETENSIONING METHOD.

CONNECTION BOLTING DETAIL — 6

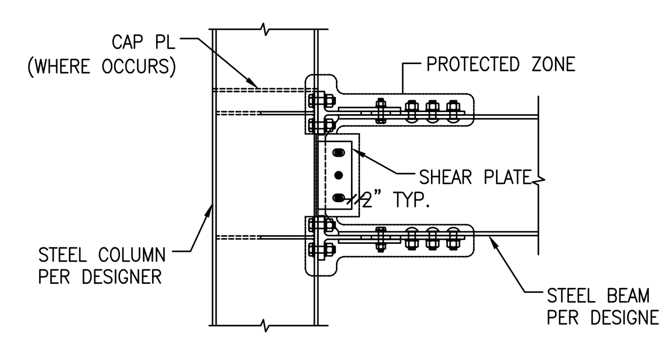

NOTE:
1. PROTECTED ZONE INCLUDES THE FOLLOWING ELEMENTS:
A. LINK FLANGE AND LINK STEM
B. BRP PLATES
C. BEAM FLANGE CONTACT AREAS CONNECTED TO THE LINK STEM
D. COLUMN FLANGE CONTACT AREAS CONNECTED TO THE LINK FLANGE
E. SHEAR PLATE AND BEAM WEB AT 2" AROUND SHEAR PLATE
F. LINK STEM, LINK FLANGE, BRP AND SHEAR PLATE BOLTS
2. PROTECTED ZONE SHALL BE MARKED BY USING ANY NON-DESTRUCTIVE METHODS PRIOR TO AND AFTER APPLICATION OF SPRAYED ON FIRE-RESISTING MATERIAL
3. NO ATTACHMENT SHALL BE MADE WITHIN THE PROTECTED ZONE.

PROTECTED ZONE — 7

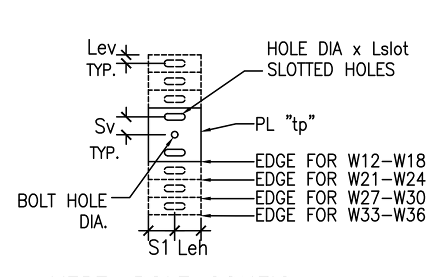

VERT. BOLT CONFIG.
(1 HORIZ. BOLT SHOWN)

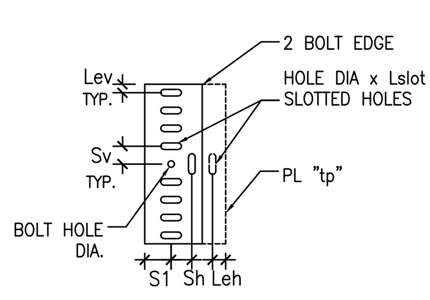

2&3 HORIZ. BOLT CONFIG.
(9 VERT. BOLTS SHOWN)

BEAM SIZE	HOLE DIA.	n VERT BOLTS	n HORZ BOLTS	Sv	Sh	Lev	Leh	Lslot	tp
W36	y+1/16"	9	W	2 7/8"	2 3/4"	1 1/4"	1 3/4"	2 7/8"	X
W33				2 1/2"					
W30		7	W	2 3/4"				2 3/8"	
W27				2 5/16"					
W24	y+1/16"	5	W	2 3/4"	2 3/4"	1 1/8"	1 3/4"	1 7/8"	X
W21				2 3/8"					
W18		3	W	3 1/4"				1 1/2"	
W16				2 5/8"					
W14				2 3/4"					
W12				2 1/16"					

1. NUMBER OF VERTICAL AND HORIZONTAL BOLTS SHOWN FOR REFERENCE ONLY. REFER TO STRUCTURAL DRAWINGS FOR PROJECT SPECIFIC REQUIREMENTS.
2. SHEAR PLATE THICKNESS (x), BOLT SIZE (y) AND QUANTITY (w) PER DESIGNER, SEE FRAME ELEVATION SHEETS.
3. S1=2.75" FOR YL4 LINKS; S1= 3.5" FOR YL6 LINKS; S1=4.0" FOR YL8 LINKS
4. BOLT HOLES IN THE BEAM FLANGES AND BEAM WEB SHALL BE STANDARD SIZE HOLES

TYPICAL SHEAR PLATE DETAIL — 16

NOTE:
1. FABRICATOR TO REQUEST YLMC2 OR DETAILING TOOLS FROM SIMPSON STRONG-TIE FOR DIMENSIONS NOT NOTED.

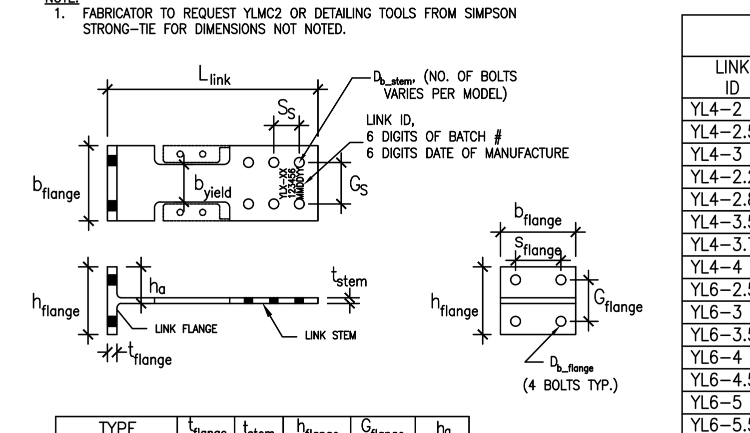

TYPE	t_{flange}	t_{stem}	h_{flange}	G_{flange}	h_a
YL4	0.875"	1/2"	5 3/4"	3 1/4"	3 3/8"
YL4–10	0.83"				
YL6/YL6–13	1.25"	3/4"	9 1/4"	5 3/4"	5"
YL8/YL8–15	1.81"	1"	10 3/4"	7"	5 7/8"

SIMPSON STRONG-TIE® STRONG FRAME® AND THE YIELD-LINK® STRUCTURAL FUSE ARE PROTECTED UNDER ONE OR MORE OF THE FOLLOWING US PATENTS AND APPLICATIONS: US PATENT NO. 8,001,734 B2, US PATENT NO. 8,375,652 B2, AND US PATENT PUBLICATION NO. 2015/0159362, AND MUST BE SUPPLIED OR LICENSED THROUGH SIMPSON STRONG-TIE.

STANDARD YIELD-LINKS										EXTENDED YIELD-LINKS									
LINK ID	L_{link}	b_{yield}	b_{flange}	s_{flange}	D_{b_flg}	D_{b_stem}	No.of Bolts[1]	BRP Model	SPACER Model	LINK ID	L_{link}	b_{yield}	b_{flange}	s_{flange}	D_{b_flg}	D_{b_stem}	No.of Bolts[1]	BRP Model	SPACER Model
YL4–2	1'–6 5/8"	2"	6 1/4"	3 1/2"	7/8"	7/8"	4	BRP4C	SP4C										
YL4–2.5		2 1/2"																	
YL4–3		3"	6 1/2"																
YL4–2.25		2 1/4"	7"	4 1/2"				BRP4A	SP4	YL4–2.25–10	1'–9 9/16"	2 1/4"	7"	4 1/2"	7/8"	7/8"	4	BRP4A–10	SP4–10
YL4–2.875		2 7/8"								YL4–2.875–10		2 7/8"							
YL4–3.5	1'–9 3/8"	3 1/2"	8"	5 1/4"			6	BRP4B		YL4–3.5–10	2'–5/16"	3 1/2"	8"	5 1/4"			6	BRP4B–10	
YL4–3.75		3 3/4"								YL4–3.75–10		3 3/4"							
YL4–4		4"								YL4–4–10		4"							
YL6–2.5	2'–3 1/2"	2 1/2"	6 1/2"	4"	7/8"	7/8"	6	BRP6D	SP6D										
YL6–3		3"	8"	5"	1"	1"		BRP6A	SP6	YL6–3–13	2'–6 1/2"	3"	8"	5"	1"	1"	6	BRP6A–13	SP6–13
YL6–3.5		3 1/2"								YL6–3.5–13		3 1/2"							
YL6–4		4"								YL6–4–13		4"							
YL6–4.5		4 1/2"	10"	6"	1 1/4"	1 1/4"		BRP6B		YL6–4.5–13		4 1/2"	10"	6"	1 1/4"	1 1/4"		BRP6B–13	
YL6–5		5"								YL6–5–13		5"							
YL6–5.5		5 1/2"	12"					BRP6C		YL6–5.5–13		5 1/2"	12"					BRP6C–13	
YL6–6		6"			1 3/8"					YL6–6–13		6"			1 3/8"				
YL8–4	2'–7 1/16"	4"	9"	5 1/4"	1 1/4"	1 1/4"	6	BRP8A	SP8	YL8–4–15	2'–9 1/16"	4"	9"	5 1/4"	1 1/4"	1 1/4"	6	BRP8A–15	SP8–15
YL8–4.5		4 1/2"			1 3/8"					YL8–4.5–15		4 1/2"			1 3/8"				
YL8–5	2'–10 7/16"	5"	12"	6"			8	BRP8B		YL8–5–15	3'–7/16"	5"	12"	6"			8	BRP8B–15	
YL8–5.5		5 1/2"			1 1/2"					YL8–5.5–15		5 1/2"			1 1/2"				
YL8–6		6"								YL8–6–15		6"							

1. NUMBER OF YIELD-LINK STEM BOLTS SHOWN IN THIS COLUMN. NUMBER OF YIELD-LINK FLANGE BOLTS=4 FOR ALL LINKS.
2. CUSTOM DESIGN LINKS AVAILABLE, CONTACT SIMPSON STRONG-TIE FOR MORE INFORMATION.
3. BEAM, COLUMN AND HOLE DIMENSIONAL TOLERANCE SHALL BE PER AISC CODE OF STANDARD PRACTICE FOR STEEL BUILDINGS AND BRIDGES (AISC 303-16)
4. YIELD-LINK CONFIGURATION VARIES PER SEPARATE (YL-XX) OR INTEGRATED SPACER PLATES (YLMC-XX) REFER ENGINEERING LETTER TITLED L-L-YLYLMC ON STRONGTIE.COM

YIELD-LINK GEOMETRIES — 8

GENERAL NOTES:
1. SIMPSON STRONG-TIE YIELD-LINK® MOMENT CONNECTION IS PROTECTED UNDER ONE OR MORE OF THE FOLLOWING U.S. PATENTS AND APPLICATIONS: U.S. PATENT NO. 8,001,734 B2, U.S. PATENT NO. 8,375,652 B2, AND U.S. PATENT PUBLICATION NO. 2015/0159362, AND MUST BE SUPPLIED OR LICENSED THROUGH SIMPSON STRONG-TIE. YIELD-LINK MOMENT CONNECTION IS MANUFACTURED AND PROTECTED UNDER U.S. PATENT NO. 10,669,718 B2 AND CANNOT BE DUPLICATED OR FABRICATED WITHOUT EXPRESSED, WRITTEN PERMISSION FROM SIMPSON STRONG-TIE CO., INC.
2. YIELD-LINK MOMENT CONNECTION IS MANUFACTURED AND TRADEMARKED BY "SIMPSON STRONG-TIE COMPANY INC." HOME OFFICE: 5956 W. LAS POSITAS BLVD., PLEASANTON, CA 94588 TEL: (800) 999-5099, FAX: (925) 847-1597. "SIMPSON STRONG-TIE COMPANY INC." IS AN ISO 9001 REGISTERED COMPANY.
3. SIMPSON STRONG-TIE® COMPANY, INC. RESERVES THE RIGHT TO CHANGE SPECIFICATIONS, DESIGNS, AND MODELS WITHOUT NOTICE OR LIABILITY FOR SUCH CHANGES.
4. USE OF A SIMPSON STRONG-TIE PRODUCT DOES NOT IMPLY THAT SIMPSON STRONG-TIE ENDORSES ANY PROJECT, STRUCTURE OR USE. NO LICENSE IS GRANTED WITH RESPECT TO ANY SIMPSON STRONG-TIE TRADEMARK OR OTHER INTELLECTUAL PROPERTY RIGHTS. WRITTEN PERMISSION MUST BE OBTAINED PRIOR TO USING ANY SIMPSON STRONG-TIE TRADEMARKS OR PROPRIETARY DOCUMENTS AND MATERIALS.
5. SIMPSON STRONG-TIE IS NOT AFFILIATED WITH, AND DOES NOT SPONSOR OR ENDORSE, THE SEOR, FABRICATOR, INSTALLER OR USERS OF THIS DRAWING, NOR DOES SIMPSON STRONG-TIE HAVE ANY JOINT VENTURE, PARTNERSHIP, AGENCY, EMPLOYMENT OR FIDUCIARY RELATIONSHIP WITH SUCH PERSONS.

DESIGN NOTES:
1. DESIGN FOR THE YIELD-LINK SPECIAL MOMENT CONNECTION SHALL BE IN ACCORDANCE WITH THE FOLLOWING:
   - 2015 AND 2018 INTERNATIONAL BUILDING CODE (IBC)
   - AISC SPECIFICATION FOR STRUCTURAL STEEL BUILDINGS (ANSI/AISC 360-16)
   - AISC SEISMIC PROVISIONS (ANSI/AISC 341-16)
   - PREQUALIFIED CONNECTIONS FOR SPECIAL AND INTERMEDIATE STEEL MOMENT FRAMES FOR SEISMIC APPLICATIONS (ANSI/AISC 358s2-20)
   - ICC-ES ESR-2802
   - 2014 RCSC SPECIFICATION FOR STRUCTURAL JOINTS USING HIGH-STRENGTH BOLTS
   - STRUCTURAL WELDING CODE-STEEL (AWS D1.1-2015)
   - STRUCTURAL WELDING CODE SEISMIC SUPPLEMENT (AWD D1.8-2016)
2. USE OF THIS PRODUCT IS SUBJECT TO THE APPROVAL OF LOCAL BUILDING DEPARTMENT.
3. THIS PRODUCT IS PART OF THE OVERALL LATERAL FORCE RESISTING SYSTEM OF THE STRUCTURE. DESIGN OF THE BUILDING'S LATERAL FORCE RESISTING SYSTEM, INCLUDING THE LOAD PATH TO TRANSFER LATERAL FORCES FROM THE STRUCTURE TO THE GROUND, IS THE RESPONSIBILITY OF THE STRUCTURAL ENGINEER OF RECORD (SEOR).
4. THE SEOR MUST SPECIFY THE REQUIRED COMPONENTS OF THE COMPLETE LOAD TRANSFER PATH INCLUDING DIAPHRAGMS, SHEAR TRANSFER, CHORDS AND COLLECTORS AND FOUNDATIONS.
5. ALL CONNECTED MEMBERS AND RELATED ELEMENTS SHALL BE DESIGNED BY THE SEOR.
6. INSTALLATION OF PRODUCT SHALL BE DONE IN CONFORMANCE WITH THESE DRAWINGS AND ICC-ES ESR-2802 AND AISC 358. THE PERFORMANCE OF MODIFIED PRODUCTS OR ALTERED INSTALLATION PROCEDURES ARE THE RESPONSIBILITY OF THE SEOR AND CONTRACTOR.

MATERIAL:
1. YIELD-LINKS: ASTM A992
2. BRP AND SPACER PLATES: ASTM A572 GR. 50
3. BEAMS AND COLUMNS MUST BE ROLLED W-FLANGE (A992) OR WELDED BUILT-UP I-SHAPE MEMBERS THAT MEETS AISC 360 SECTION A3 AND AISC 358 SECTION 2.3.2.
4. SHEAR PLATE, STIFFENER PLATE AND DOUBLER PLATE: ASTM A572 GR. 50 (U.N.O.)
5. LINK STEM-TO-BEAM FLANGE BOLTS SHALL BE ASTM GRADE F3125 A490 OR F2280 (X OR N) (PRETENSIONED)
6. LINK FLANGE-TO-COLUMN FLANGE BOLTS SHALL BE ASTM F3125 GRADE A325-N (SNUG-TIGHT) OR F1852-N (PRETENSIONED)
7. SHEAR PLATE-TO-BEAM WEB BOLTS SHALL BE ASTM F3125 GRADE A325, A490, F1852 OR F2280 (X OR N TYPE PER DESIGN)
8. BRP-TO-BEAM FLANGE BOLTS SHALL BE ASTM F3125 GRADE A325-N (A325-X FOR YL8-6 & YL8-6-15)
9. COMPRESSIBLE EXPANSION JOINT MATERIAL: SPECIFIED COMPRESSIVE STRENGTH MUST BE NO LESS THAN 10 PSI UNLESS OTHERWISE INDICATED ELSEWHERE FOR THE PROJECT. SPECIFIED COMPRESSIVE STRENGTH MUST BE NO MORE THAN 100 PSI. RECOMMENDED MATERIALS AT NON-FIRE RATED ASSEMBLIES ARE RIGID FOAM TYPE EXPANDED POLYSTYRENE (EPS) OR TYPE EXTRUDED POLYSTYRENE (XPS). RECOMMENDED MATERIALS AT FIRE-RATED ASSEMBLIES ARE SPRAYED FIRE-RESISTIVE MATERIALS (SPRAY-APPLIED FIREPROOFING) WITH FIRE RESISTANCE DESIGN PARAMETERS AS REQUIRED FOR THE PROJECT.

YIELD-LINK CONNECTION WELDING REQUIREMENTS:
1. ALL SHOP AND FIELD WELDING ON COMPONENTS (SHEAR PLATE, STIFFENER PLATE, DOUBLER PLATE [IF REQUIRED]) OF THE YIELD-LINK CONNECTION SHALL BE DONE BY PERSONNEL QUALIFIED PER AWS D1.1 SECTION 4 PART C, AWS D1.8 ANNEX D (AS REQUIRED), AND AS APPROVED BY AHJ.
2. ALL WELDERS SHALL HAVE EVIDENCE OF PASSING THE AWS D.1 STANDARD QUALIFICATION TESTING, AND SHALL BE CERTIFIED FOR THE WORK THEY ARE PERFORMING.
3. SPECIFIC WRITTEN WELDING PROCEDURE SPECIFICATIONS (WPS) FOR EVERY WELDING APPLICATION USED FOR THE YIELD-LINK CONNECTIONS IN THE PROJECT SHALL BE SUBMITTED TO THE SEOR, AHJ FOR REVIEW AND APPROVAL PRIOR TO START OF WORK. EACH WPS SHALL REFERENCE THE PREQUALFIED WELDED JOINT DETAIL FROM SECTION 3 OF AWS D1.1.
4. IN LIEU OF ITEM 2, THE STEEL FABRICATOR MAY PROVIDE A PROCEDURE QUALIFICATION RECORD (PQR) FOR THE CONNECTION WELDS USED FOR THE PROJECT. THE PQR SHALL CONFORM TO THE REQUIREMENTS OF AWS D1.1 SECTION 4.
5. WPS (OR PQR) SHALL CONTAIN ALL THE ESSENTIAL VARIABLES USED IN THE WELDING PROCEDURE AND SHALL BE STAMPED/APPROVED BY AN AMERICAN WELDING SOCIETY (OR APPROVED EQUIVALENT) CERTIFIED WELDING INSPECTOR.
6. UNLESS NOTED OTHERWISE BY THE ENGINEER OF RECORD, ALL WELD FILLER METAL SHALL HAVE CLASSIFICATION STRENGTH (F_{EXX}) OF 70 KSI.
7. FOR NON-DEMAND CRITICAL WELDS (BEAM TO COLUMN SHEAR PLATE AND COLUMN STIFFENER/CONTINUITY PLATE), WELD FILLER METAL SHALL MEET THE REQUIREMENT OF AWS D1.1 AND D1.8 MINIMUM CHARPY V-NOTCH REQUIREMENT OF 20 FT*LBS AT 0°(F).
8. FOR DEMAND CRITICAL WELDS, COLUMN SPLICES, DOUBLER PLATES (CJP WELDS) AND BASE PLATES, WELD FILLER METAL SHALL MEET THE REQUIREMENTS OF AWS D1.1 AND D1.8 MINIMUM CHARPY V-NOTCH REQUIREMENT OF 20 FT*LBS AT 0°(F) AND 40 FT*LBS AT 70°(F).
9. IN ADDITION TO THE MINIMUM CHARPY V-NOTCH REQUIREMENT, ALL FILLER METAL SHALL MEET THE DIFFUSIBLE HYDROGEN LEVEL AS NOTED IN SECTION 6.1.3 OF AWS D1.8.
10. SUBMIT WELDER QUALIFICATION, WPS (OR PQR), AND FILLER METAL CERTIFICATION OF CONFORMANCE PROVIDED BY THE WIRE MANUFACTURE TO THE SEOR AND AHJ FOR APPROVAL PRIOR TO FABRICATION.
11. STEEL BASE METAL WHICH WELD METAL IS TO BE DEPOSITED SHALL BE FREE OF DUST, MOISTURE, GREASE SLAG, MILL SCALE AND OTHER FOREIGN MATERIAL THAT WOULD PREVENT PROPER WELD DEPOSIT.
12. FOR SHEAR PLATE WELDS, FILLET WELD TERMINATION MAY EXTEND TO THE ENDS OF THE SHEAR PLATE OR MAYBE STOPPED SHORT AT EACH END OF THE SHEAR PLATE FOR A LENGTH THAT'S THE SAME DIMENSION AS THE WELD SIZE. FILLET WELDS SHALL NOT BE WRAPPED AROUND TO THE TOP AND BOTTOM EDGES OF THE SHEAR PLATE.
13. FOR COLUMN STIFFENER/CONTINUITY PLATES, FILLET WELDS SHALL TERMINATE A DISTANCE OF ONE FILLET WELD SIZE FROM THE k DISTANCE + 1-1/2" FROM THE EXTERIOR COLUMN FLANGE, AND k1 DISTANCE + 1/2" FROM THE CENTERLINE OF THE COLUMN WEB.
14. ALL COMPLETE PENETRATION GROOVE WELDS (CJP) SHALL BE ULTRA-SONIC TESTED PER D1.1 AND D1.8 REQUIREMENTS AS APPLICABLE.
15. WHEN WELDING OF DOUBLER PLATES, CONTINUITY PLATES, OR STIFFENERS HAS BEEN PERFORMED IN THE K-AREA, THE WEB SHALL BE TESTED FOR CRACKS USING MAGNETIC PARTICLE TESTING. THE MAGNETIC PARTICLE TEST AREA SHALL INCLUDE THE K-AREA BASE METAL WITHIN 3" OF THE WELD.
16. CJP GROOVE WELD ON BASE METAL THICKER THAN 1-1/2" SHALL BE ULTRASONICALLY TESTED FOR DISCONTINUITIES (LAMELLAR TEARING). ANY BASE METAL DISCONTINUITIES FOUND SHALL BE ACCEPTED OR REJECTED ON THE BASIS OF CRITERIA OF AWS D1.1 TABLE 6.3.

YIELD-LINK CONNECTION BOLTING REQUIREMENTS:
1. BOLT HOLES SHALL BE MADE BY DRILLING, PUNCHING OR THERMAL CUTTING. MECHANICALLY GUIDED MEANS OF THERMALLY CUT HOLES SHALL HAVE A SURFACE ROUGHNESS PROFILE NOT EXCEEDING 1000 MICRO-INCHES AS DEFINED IN ASME B46.1.
2. FAYING SURFACES ADJACENT TO THE BOLT HEAD AND NUT SHALL BE FREE OF DIRT AND OTHER FOREIGN MATERIAL. BEAM FLANGE SURFACE CONNECT THE YIELD-LINK STEM SHALL BE FREE OF SCALE, COATING OR INADVERTANT OVERSPRAY (SEE DETAIL 1, 2, 5, 6 9 AND 13 ON YLMC2 SHEET). BURRS LESS THAN OR EQUAL 1/16" IN HEIGHT ARE PERMITTED ON THE FAYING SURFACES OF ALL JOINTS.
3. HIGH STRENGTH BOLTS SHALL HAVE LOT TRACEABILITY, CHEMICAL AND MECHANICAL TEST RESULTS INDICATED ON THE MILL CERTIFICATION/TEST REPORTS. BOLT MILL CERTIFICATIONS SHALL BE SUBMITTED TO SEOR PRIOR TO ASSEMBLY OR ERECTION OF STRUCTURAL STEEL.
4. HIGH STRENGTH BOLTS SHALL BE STORE AND PROTECTED FROM MOISTURE AND DIRT IN CLOSED CONTAINERS.
5. TWIST-OFF TYPE BOLT (F1852 AND F2280) ASSEMBLIES (BOLT, WASHER AND NUT) SHALL NOT BE RE-LUBRICATED, EXCEPT BY THE MANUFACTURER.
6. A490 BOLTS, F1852 AND F2280 TWIST-OFF TYPE ASSEMBLIES SHALL NOT BE REUSED. TOUCHING UP OR RE-TIGHTENING BOLTS THAT MAY HAVE BEEN LOOSENED BY INSTALLATION OF ADJACENT BOLTS NEED NOT BE CONSIDERED AS A REUSE.
7. UP TO 1/4 INCH THICK FINGER SHIMS MAYBE USED WITHOUT RESTRICTION AT THE YL TO COLUMN FLANGE CONNECTION.
8. YIELD-LINK STEM TO BEAM FLANGE BOLTS SHALL BE INSTALLED AS PRETENSIONED. BOLTS CAN BE PRETENSIONED BY TWISTED-OFF-TYPE TENSION CONTROLLED BOLTS, DIRECT TENSION INDICATOR (DTI) WASHERS, TURN-OF-NUT METHOD, OR CALIBRATED WRENCH METHOD. SEE SPECIFICATION FOR STRUCTURAL JOINTS USING HIGH-STRENGTH BOLTS FOR REQUIREMENTS OF THESE PRETENSIONING METHODS.
9. SEE DETAIL 6/YLMC1 FOR LINK FLANGE-TO-COLUMN FLANGE BOLTING, BEAM WEB-TO-SHEAR PLATE BOLTING AND BUCKLING RESTRAINT PLATE-TO BEAM FLANGE BOLTING REQUIREMENTS.
10. FOR PRETENSIONED JOINTS, MINIMUM BOLT PRETENSION VALUE SHALL BE PER RCSC TABLE 8.1.
11. BOLTING PRE-INSTALLATION VERIFICATION SHALL BE CONDUCTED TO VERIFY THE PRETENSIONING METHOD USED FOR THE SPECIFIC PROJECT CAN ACHIEVE THE MINIMUM BOLT TENSION VALUES.
12. BOLTS IN "X" CONNECTIONS SHALL HAVE THE THREADS EXCLUDED FROM THE SHEAR PLANE. BOLTS IN THE "N" CONNECTIONS MAY HAVE THE THREADS INCLUDED IN THE SHEAR PLANE.
13. MINIMUM BOLT LENGTHS USED SHALL BE SUCH THAT BOLT THREAD IS AT LEAST FLUSH WITH THE OUTER FACE OF THE NUT.

INSTALLATION, FIELD MODIFICATIONS AND REPAIRS:
THESE GENERAL INSTRUCTIONS FOR THE INSTALLER ARE PROVIDED TO ENSURE PROPER SELECTION AND INSTALLATION OF SIMPSON STRONG-TIE COMPANY INC. PRODUCTS AND MUST BE FOLLOWED CAREFULLY. THESE GENERAL INSTRUCTIONS ARE IN ADDITION TO THE SPECIFIC INSTALLATION INSTRUCTIONS AND NOTES PROVIDED FOR EACH PARTICULAR PRODUCT, ALL OF WHICH SHOULD BE CONSULTED PRIOR TO AND DURING INSTALLATION OF SIMPSON STRONG-TIE COMPANY INC. PRODUCTS.
1. PROPER PRODUCT INSTALLATION REQUIRES CAREFUL ATTENTION TO ALL NOTES AND INSTRUCTIONS. IN ADDITIONAL TO THE NOTES, WARNINGS, AND INSTRUCTIONS PROVIDED IN THE CATALOG, INSTALLERS, DESIGNERS, ENGINEERS AND CONSUMERS SHOULD CONSULT THE SIMPSON STRONG-TIE COMPANY INC. WEB SITE AT WWW.STRONGTIE.COM TO OBTAIN ADDITIONAL INFORMATION FOR INSTALLATION, SPECIFICATIONS, CODE REPORTS, TECHNICAL FLIERS AND BULLETINS, FAQS, AND OTHER PERTINENT INFORMATION.
2. FABRICATION AND ERECTION TOLERANCE SHALL BE IN ACCORDANCE WITH AISC 303-16 CODE OF STANDARD PRACTICE FOR STEEL BUILDINGS AND BRIDGES.
3. ALL SPECIFIED FASTENERS MUST BE INSTALLED ACCORDING TO THE INSTRUCTIONS PROVIDED IN THE CATALOG, CODE REPORT, AND INSTALLATION DETAILS. INCORRECT FASTENER QUANTITY, SIZE, PLACEMENT, TYPE, MATERIAL, OR FINISH MAY CAUSE THE CONNECTION TO FAIL.
4. YIELD-LINKS SHALL NOT BE HOT-DIP GALVANIZED.
5. YIELD-LINKS SHALL BE INSTALLED WITH MATCHING HEAT NUMBER AT EACH CONNECTION (I.E. TOP AND BOTTOM LINKS ON EACH END OF THE BEAM SHALL BE THE SAME HEAT).
6. ALL FIELD MODIFICATIONS AND REPAIRS MUST BE APPROVED BY THE SEOR
7. YIELD-LINK SIZE, SPACER AND BRP SHALL BE INSTALLED PER MANUFACTURER OR SEOR'S FRAME ELEVATION DRAWINGS.
8. DO NOT CUT OR ENLARGE EXISTING HOLES IN THE YIELD-LINK, BRP OR SPACER PLATES.

FIREPROOFING:
1. WHEN THE STEEL STRUCTURE IS REQUIRED TO MEET CERTAIN TYPE OF CONSTRUCTION RATING, THE YIELD-LINK CONNECTION SHALL HAVE A FIRE RATING SIMILAR TO THAT OF THE PRIMARY STRUCTURAL FRAME.
2. WHERE SPRAY FIRE-RESISTANT MATERIAL (SFRM) IS USED, MINIMUM THICKNESS OF SFRM FOR THE YIELD-LINK FLANGE AND STEM SHALL BE SIMILAR TO THAT OF THE BEAM AND COLUMN SECTIONS.
3. FOR CASES WHEN THE CONCRETE THICKNESS ABOVE THE YIELD-LINK COVER PLATE IS SHALLOWER THAN THE CONCRETE THICKNESS ABOVE THE METAL DECK RIB, YIELD-LINK AND COVER PLATE AT THE BEAM TOP FLANGE CAN BE COVERED WITH FIRE BARRIER PAINT WITH A COATING THICKNESS THAT PROVIDES THE SAME FIRE RATING PROTECTION AS THE PRIMARY STRUCTURAL FRAME. FIRE BARRIER PAINT SHALL BE TESTED AND CERTIFIED TO ASTM E119.

QUALITY CONTROL AND QUALITY ASSURANCE
1. INSPECTION REQUIREMENTS SHALL BE IN ACCORDANCE WITH THE LOCAL CODE, BASED ON BUILDING OCCUPANCY, REQUIREMENTS OF THE LOCAL BUILDING OFFICIAL, AND OTHER CONSIDERATIONS SPECIFIED BY THE STRUCTURAL ENGINEER OF RECORD.
2. THE FABRICATOR AND ERECTOR SHALL BE RESPONSIBLE FOR QUALITY CONTROL (Q/C) BY ENSURING WORKMANSHIP MEETS THE REQUIREMENTS OF THE CONTRACT DOCUMENTS. THE OWNER'S REPRESENTATIVE SHALL BE RESPONSIBLE FOR QUALITY ASSURANCE (Q/A) INSPECTIONS. Q/C AND Q/A REQUIREMENTS SHALL BE IN ACCORDANCE WITH AISC 360 CHAPTER M AND AISC 341 CHAPTER J.
3. CONTACT SIMPSON STRONG-TIE® AT 800-999-5099 TO REQUEST YIELD-LINK MILL CERTS.
4. STEEL MOMENT FRAME CONNECTIONS UTILIZING THE SIMPSON STRONG-TIE YIELD-LINK CONNECTION SHALL HAVE AN IDENTIFICATION STICKER (PROVIDED BY SIMPSON STRONG-TIE) PLACED NEXT TO THE SHEAR PLATE BETWEEN THE LINKS FOR EACH CONNECTION.
5. YIELD-LINK SIZE, SPACER AND BRP SHALL BE INSTALLED PER MANUFACTURER OR SEOR'S FRAME ELEVATION DRAWINGS.
6. YIELD-LINKS SHALL BE INSTALLED WITH MATCHING HEAT NUMBER AT EACH CONNECTION.

GENERAL NOTES — 4

NO.	DATE	REVISIONS

SIMPSON STRONG-TIE, CO. INC.
• 5956 W. Las Positas Blvd. Pleasanton, CA 94588
• Tel: (800) 999-5099
• Fax: (925) 847-15977
• Web site: www.strongtie.com

SIMPSON Strong-Tie — THERE IS NO EQUAL

YIELD-LINK® MOMENT CONNECTION
STEEL SPECIAL MOMENT FRAME
CONNECTION DETAILING INFORMATION

NAME: B.C.
DATE: 04-07-2015
SCALE: N.T.S.
SHEET:
YLMC1 (WOOD)
JOB NO.

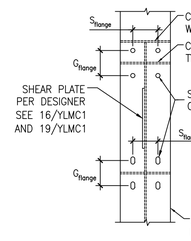

NOTE:
1. REFER TO RCSC FOR WASHER REQUIREMENTS ON SLOTTED HOLES
2. SEE DETAIL 17/YLMC1 FOR WASHER OPTIONS WHEN WASHERS ENCROACH INTO COLUMN K REGION.
3. SEE 4/YLMC2 FOR Sflange AND Gflange DIMENSIONS

COLUMN FLANGE HOLES | 17

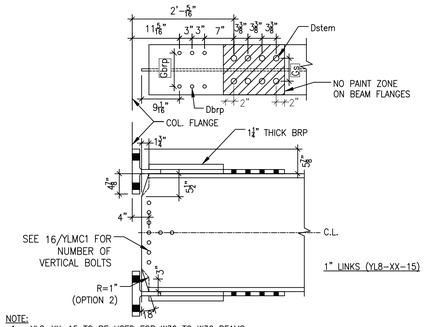

NOTE:
1. YL8-XX-15 TO BE USED FOR W30 TO W36 BEAMS
2. SEE 4/YLMC2 FOR Gs, Dbrp AND Dstem, TYP.

EXTENDED YL8 BEAM COPE/HOLE | 13

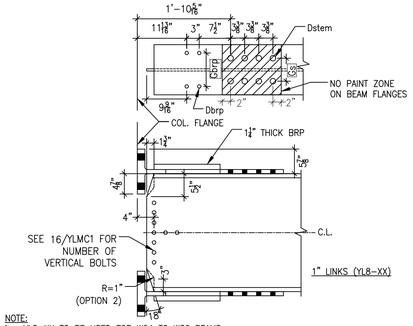

NOTE:
1. YL8-XX TO BE USED FOR W24 TO W36 BEAMS
2. SEE 4/YLMC2 FOR Gs, Dbrp AND Dstem, TYP.

YL8 BEAM COPE/HOLE DETAILS | 9

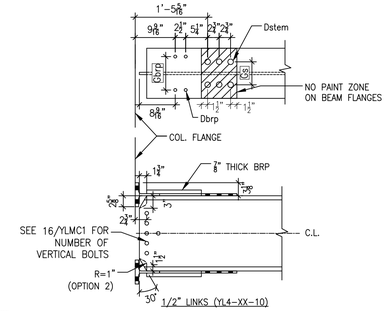

NOTE:
1. YL4-XX-10 TO BE USED FOR W21 TO W27 BEAMS
2. SEE 4/YLMC2 FOR Gs, Dbrp AND Dstem, TYP.

EXTENDED YL4 BEAM COPE/HOLE | 5

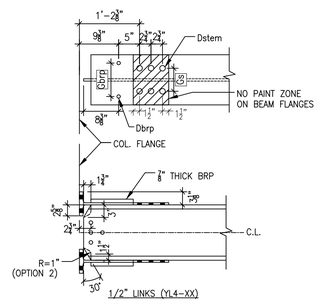

NOTE:
1. YL4-XX TO BE USED FOR W12 TO W18 BEAMS
2. SEE 4/YLMC2 FOR Gs, Dbrp AND Dstem, TYP.

YL4 BEAM COPE/HOLE DETAILS | 1

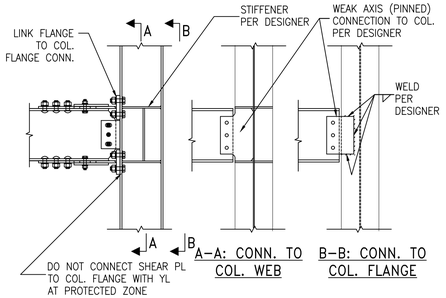

ORTHOGONAL CONN. TO COL. | 18

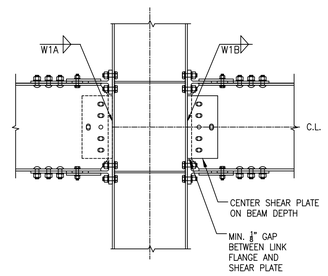

NOTE:
1. W1A & W1B FILLET WELDS SHALL BE MIN. ⅝ X SHEAR PLATE THICKNESS ON E.S.
2. SHEAR PLATE GEOMETRY SEE 16/YLMC1 AND FRAME ELEVATION SHEETS

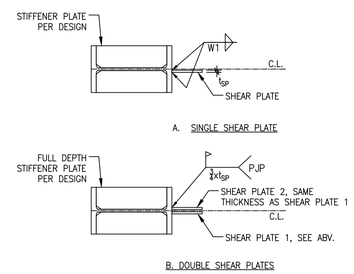

SHEAR PLATE DETAILS | 10

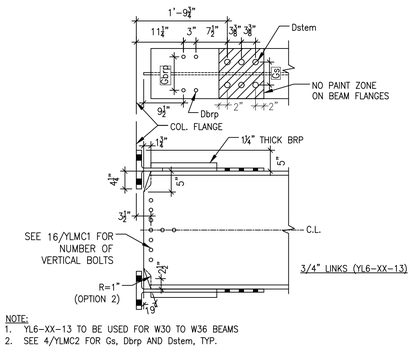

NOTE:
1. YL6-XX-13 TO BE USED FOR W30 TO W36 BEAMS
2. SEE 4/YLMC2 FOR Gs, Dbrp AND Dstem, TYP.

EXTENDED YL6 BEAM COPE/HOLE | 6

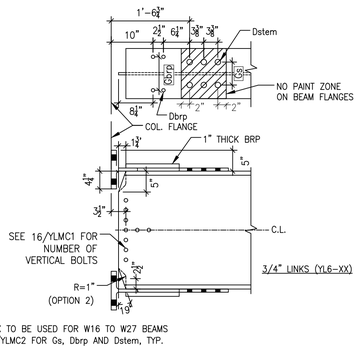

NOTE:
1. YL6-XX TO BE USED FOR W16 TO W27 BEAMS
2. SEE 4/YLMC2 FOR Gs, Dbrp AND Dstem, TYP.

YL6 BEAM COPE/HOLE DETAILS | 2

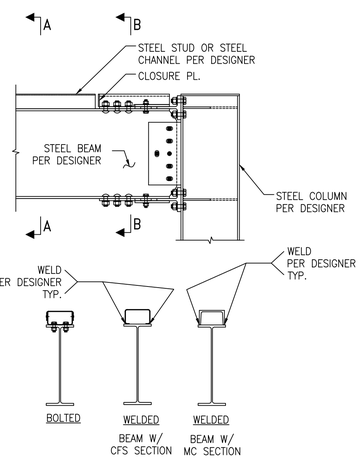

SECTION A-A: BEAM TOP CONNECTION

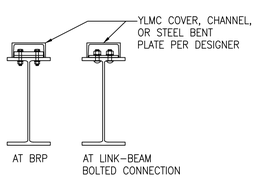

SECTION B-B: BEARING CONNECTION AT LINK REGION

ALT. ATTACHMENTS AT SMF BM FLG | 20

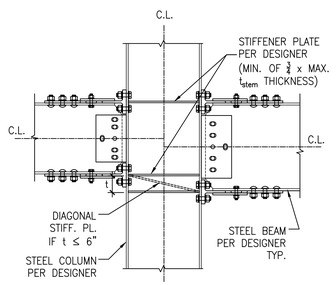

DIAGONAL STIFFENER PLATE

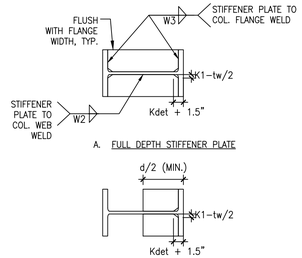

NOTE:
1. W2, W3 WELDS PER DRAWING ELEVATION WELD TABLE, SEE STRUCTURAL DRAWINGS AND 19/YLMC1

STIFFENER PLATE DETAILS | 11

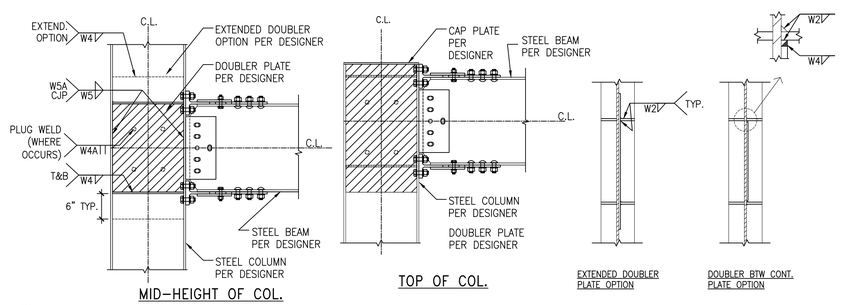

NOTE:
1. W4, W5 WELDS PER DRAWING ELEVATION WELD TABLE, SEE STRUCTURAL DRAWINGS
2. WHEN W5 IS A CJP WELD, IT SHALL MEET D1.8 DC WELD REQUIREMENTS (SEE 19/YLMC1)

DOUBLER PLATE DETAILS | 12

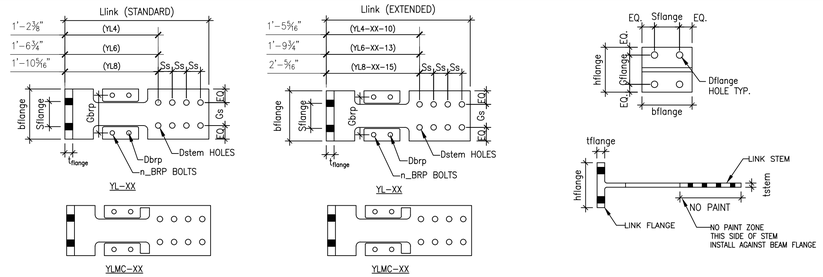

STANDARD YLD-LINKS				EXTENDED YLD-LINKS				SHARED PARAMETERS										
LINK ID	tstem / tflange	Llink	n_BRP BOLTS	LINK ID	tstem / tflange	Llink	n_BRP BOLTS	bflange	hflange	Sflange	Gflange	Dflange	Dstem(5)	Dbrp	Gbrp	Gs	Ss	n STEM BOLTS	n FLG BOLTS
YL4-2	1/2" / 7/8"	1'-6⅜"	2 (TOTAL)				4 (TOTAL)	6¼"	5¼"	3½"	3¼"	15/16"	15/16"	1 1/16"	3¼"	3½"	2¾"	4	4
YL4-2.5										3½"	3¼"	15/16"	15/16"	1 1/16"	4¼"	3½"	2¾"		
YL4-3								6½"		3½"	3¼"	15/16"	15/16"	1 1/16"	4¾"	3½"	2¾"		
YL4-2.25				YL4-2.25-10	1/2" / 13/16"	1'-9⅜" / 2'-0⅝"		7"		4½"	3¼"	15/16"	15/16"	1 1/16"	4⅜"	3½"	2¾"		
YL4-2.875				YL4-2.875-10						4½"	3¼"	15/16"	15/16"	1 1/16"	5"	3½"	2¾"		
YL4-3.5		1'-9⅜"		YL4-3.5-10				8"		5¼"	3¼"	15/16"	15/16"	1 1/16"	5⅝"	5¼"	2¾"	6	
YL4-3.75				YL4-3.75-10						5¼"	3¼"	15/16"	15/16"	1 1/16"	5⅞"	5¼"	2¾"		
YL4-4				YL4-4-10						5¼"	3¼"	15/16"	15/16"	1 1/16"	6⅛"	5¼"	2¾"		
YL6-2.5	3/4" / 1¼"	2'-3½"	4 (TOTAL)		3/4" / 1¼"	2'-6½"	4 (TOTAL)	6½"	9¼"	4"	5¼"	15/16"	15/16"	1 3/16"	4⅝"	4"	3⅜"	6	4
YL6-3				YL6-3-13				8"		5"	5¼"	1 1/16"	1 1/16"	1 3/16"	5¼"	5"	3⅜"		
YL6-3.5				YL6-3.5-13						5"	5¼"	1 1/16"	1 1/16"	1 3/16"	5¾"	5"	3⅜"		
YL6-4				YL6-4-13				10"		5"	5¼"	1 5/16"	1 1/16"	1 3/16"	6¼"	5"	3⅜"		
YL6-4.5				YL6-4.5-13						6"	5¼"	1 5/16"	1 3/16"	1 3/16"	6¾"	6"	3⅜"		
YL6-5				YL6-5-13						6"	5¼"	1 5/16"	1 3/16"	1 3/16"	7¼"	6"	3⅜"		
YL6-5.5				YL6-5.5-13				12"		6"	5¼"	1 5/16"	1 5/16"	1 3/16"	7¾"	6"	3⅜"		
YL6-6				YL6-6-13						6"	5¼"	1 7/16"	1 3/16"	1 3/16"	8¼"	6"	3⅜"		
YL8-4	1" / 1 13/16"	2'-7"	4 (TOTAL)	YL8-4-15	1" / 1 13/16"	2'-9⅛" / 3'-0⅞"	6 (TOTAL)	9"	10¾"	5¼"	7"	1 5/16"	1 3/16"	1 3/16"	6½"	5¼"	3⅜"	6	4
YL8-4.5				YL8-4.5-15						5¼"	7"	1 7/16"	1 3/16"	1 3/16"	7"	5¼"	3⅜"		
YL8-5		2'-10⅞"		YL8-5-15				12"		6"	7"	1 7/16"	1 3/16"	1 3/16"	7½"	6"	3⅜"	8	
YL8-5.5				YL8-5.5-15						6"	7"	1 9/16"	1 3/16"	1 3/16"	8"	6"	3⅜"		
YL8-6				YL8-6-15						6"	7"	1 9/16"	1 3/16"	1 3/16"	8½"	6"	3⅜"		

NOTES:
1. FOR CUSTOM LINKS NOT NOTED CONTACT SIMPSON STRONG-TIE FOR CUSTOM DETAILING GEOMETRIES
2. BEAM, COLUMN AND HOLE DIMENSIONAL TOLERANCE SHALL BE PER AISC CODE OF STANDARD PRACTICE FOR STEEL BUILDINGS AND BRIDGES (AISC 303-16)
3. Dstem HOLES ON BEAM FLANGES ARE PERMITTED TO BE STANDARD SIZES HOLES PER AISC 360-16 TABLE J3.3, ALL LINK HOLE SIZES SHOWN ARE 1/16" LARGER THAN BOLT DIAMETER.
4. SEE DETAILS 1/-, 2/-, 5/-, 6/-, 9/- AND 13/- FOR BEAM COPE AND BOLT HOLE DETAILS
5. SEE DETAIL 17/- FOR COLUMN FLANGE BOLT HOLE DETAILS
6. YIELD-LINK CONFIGURATION VARIES PER SEPARATE (YL-XX) OR INTEGRATED SPACER PLATES (YLMC-XX) REFER ENGINEERING LETTER TITLED L-L-YLYLMC ON STRONGTIE.COM

YIELD-LINK DETAILED GEOMETRIES | 4

NO.	DATE	REVISIONS

SIMPSON STRONG-TIE, CO. INC.
• 5956 W. Las Positas Blvd. Pleasanton, CA 94588
• Tel: (800) 999-5099
• Fax: (925) 847-15977
• Web site: www.strongtie.com

SIMPSON Strong-Tie THERE IS NO EQUAL

YIELD-LINK® MOMENT CONNECTION
STEEL SPECIAL MOMENT FRAME
CONNECTION DETAILING INFORMATION

NAME: B.C.
DATE: 04/07/2023
SCALE: N.T.S.
SHEET:
YLMC2
JOB NO.

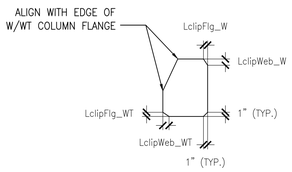

NOTES:
1. WEB COPE AT WT AND W SECTIONS (LclipWeb_WT, LclipWeb_W) = k+1.5"−t_f
2. FLANGE COPE AT WT AND W SECTIONS (LclipFlg_WT, LclipFlg_W) = k_1+0.5"−t_w/2
3. SEE AWS D1.8 CHAPTER C−4 FOR MORE INFORMATION
4. SEE AISC STEEL MANUAL FOR k, k_1, t_f AND t_w VALUES FOR THE COLUMNS

CRUCIFORM COL. STP CLIP DETAILS | 18

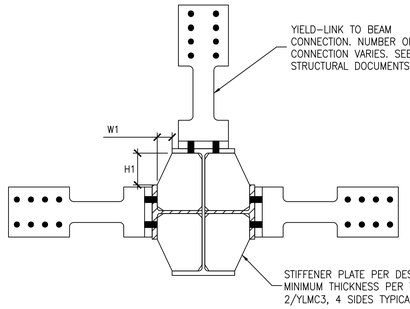

3−SIDED MOMENT CONNECTION

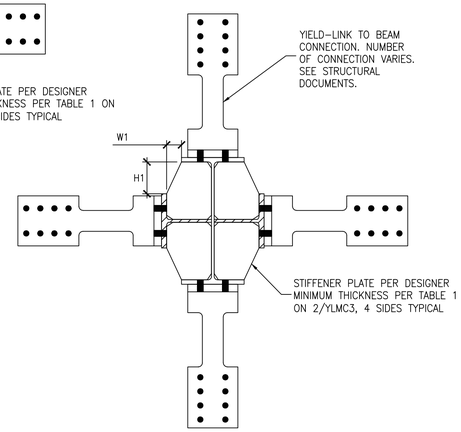

4−SIDED MOMENT CONNECTION

NOTES:
1. SEE 2/− FOR INFO NOT NOTED

MULTI-DIRECTION MOMENT CONNECTION DETAIL | 10

TABLE 1	
YIELD−LINK	MIN. STIFF. THK (IN)
YL4	3/8
YL6	1/2
YL8	5/8

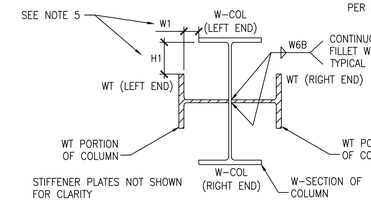

SECTION A−A

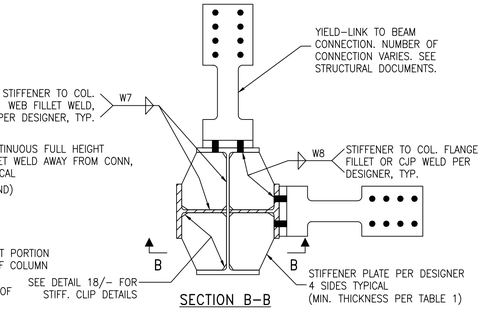

SECTION B−B

2−SIDED MOMENT CONNECTION

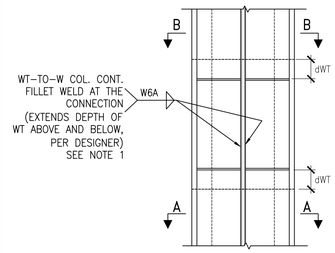

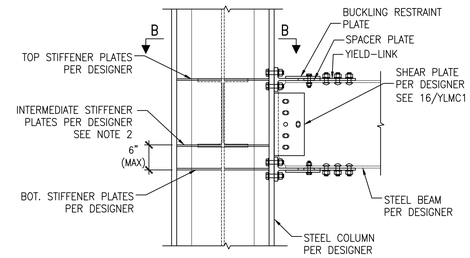

NOTES:
1. DOUBLE SIDED FILLET WELD SHALL DEVELOP SHEAR AT COLUMN FLANGE−TO−WEB CONNECTION STRENGTH. SMALLER OF: (A) NOMINAL SHEAR STRENGTH OF WT COLUMN WEB, (B) MAXIMUM SHEAR FORCE AT PR_LINK OF CONNECTION.
2. INTERMEDIATE STIFFENER REQUIRED IF DIFFERENCE BETWEEN DEPTH OF BEAMS CONNECTING W−COL AND WT SECTION IS GREATER THAN 6".
3. SEE 6/YLMC1 FOR BOLTING REQUIREMENTS
4. SEE 7/YLMC1 FOR PROTECTED ZONE AT YIELD−LINK CONNECTION
5. W1 AND H1 ARE DIMENSIONS FOR WELDING CLEARANCE. DESIGNER TO COORDINATE WITH FABRICATOR FOR MINIMUM DIMENSIONS REQUIRED.

CORNER CONDITION WITH FLANGE CRUCIFORM COLUMN | 2

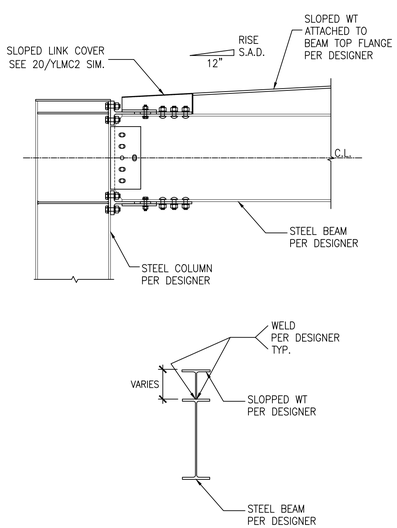

SLOPED BEAM CONN (OPTION 3) | 20

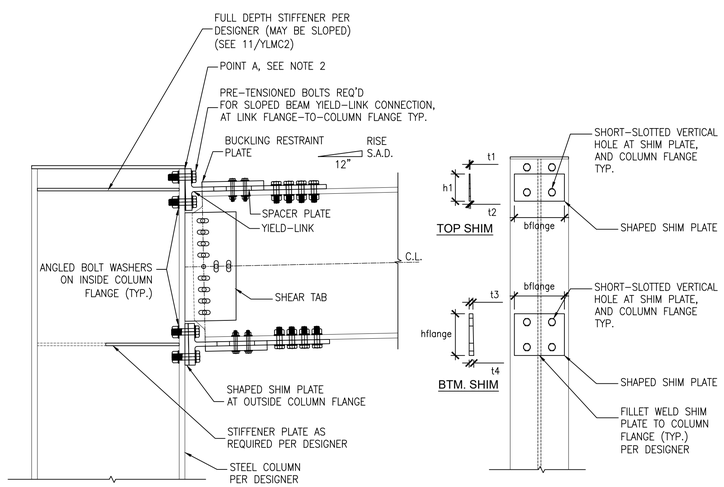

NOTES:
1. SEE 4/− FOR INFO NOT NOTED
2. THICKNESS OF SHIMS (t1, t2, t3 AND t4) TO BE DETERMINED BY DESIGNER/DETAILER ASSUMING TOP OF LINK FLANGE IN CONTACT WITH COLUMN FLANGE (POINT A), WITH MINIMUM SHIM THICKNESS OF 1/16" AT (t1 and t3 LOCATIONS)
3. t1 SHALL BE A MAXIMUM OF 1/8"

SLOPED BEAM YIELD-LINK CONNECTION (OPTION 2) | 12

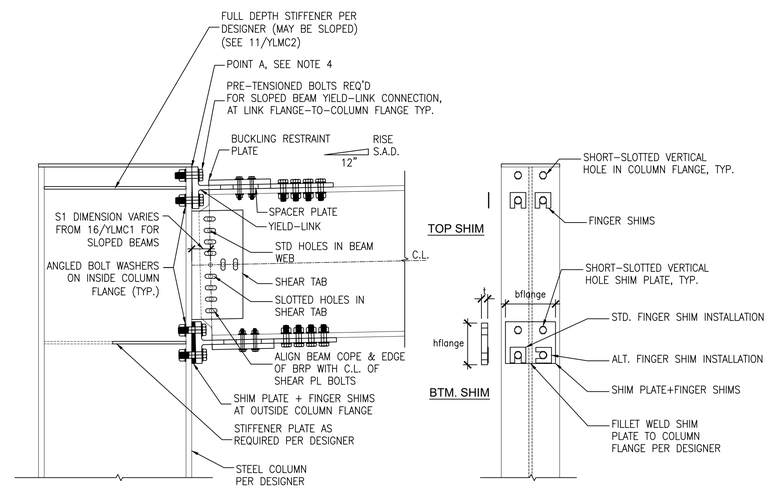

NOTES:
1. MAXIMUM RISE = 1" PER FOOT. CONTACT SIMPSON STRONG−TIE FOR STEEPER SLOPES.
2. LINK FLANGE−TO−COLUMN FLANGE BOLTS SHALL BE PRE−TENSIONED FOR SLOPED BEAM−TO−COLUMN YIELD−LINK CONNECTIONS
3. SHIM PLATE SIZE TO MATCH LINK FLANGE LENGTH AND WIDTH DIMENSIONS.
4. THICKNESS OF SHIM TO BE DETERMINED BY DESIGNER/DETAILER ASSUMING TOP OF LINK FLANGE IN CONTACT WITH COLUMN FLANGE (POINT A)
5. SHIM PLATE MATERIAL: A36 OR A572 GR. 50
6. FINGER SHIM MATERIAL: STRUCTURAL−GRADE STEEL MATERIAL, BUT NEED NOT BE HARDENED
7. ANGLED BOLT WASHER MATERIAL: F436
8. BEAM SLOPED DOWN CONDITION SIMILAR
9. SEE YLMC1 SHEET FOR FURTHER INFORMATION

SLOPED BEAM YIELD-LINK CONNECTION (OPTION 1) | 4

NO.	DATE	REVISIONS

SIMPSON STRONG−TIE, CO. INC.
• 5956 W. Las Positas Blvd. Pleasanton, CA 94588
• Tel: (800) 999−5099
• Fax: (925) 847−15977
• Web site: www.strongtie.com

SIMPSON Strong-Tie THERE IS NO EQUAL

YIELD-LINK® MOMENT CONNECTION

STEEL SPECIAL MOMENT FRAME CONNECTION DETAILING INFORMATION

SIMPSON Strong-Tie THERE IS NO EQUAL

NAME: B.C.

DATE: 04/07/2023

SCALE: N.T.S.

SHEET:

YLMC3

JOB NO.